Competence in Communication Technologies

EoC 2-01

Ethernet over Coax | WiFi

Betriebsanleitung

KLASSE A CLASS

Inhaltsverzeichnis

Warnhinweise

- ➔ NICHT in der Nähe von Wasser oder in feuchten Räumen, z. B. feuchten Kellern oder in der Nähe von Schwimmbecken verwenden.
- ➔ Das Gerät NICHT im Freien verwenden. Alle Verbindungen müssen sich innerhalb eines Gebäudes befinden.
- ➔ Gerät von Feuchtigkeit, Staub oder ätzenden Flüssigkeiten fernhalten.
- ➔ Das Gerät NICHT während eines Gewitters installieren, verwenden oder warten. Bei Gewitter besteht die Gefahr eines Stromschlags.
- ➔ AUSSCHLIESSLICH geeignete Zubehörteile an das Gerät anschließen.
- ➔ Sicher stellen, dass alle Kabel an den korrekten Port angeschlossen sind.
- ➔ Ethernet-, Antennen- und Stromkabel sorgfältig verlegen, so dass niemand darauf treten oder darüber stolpern kann.
- ➔ Die Lüftungsschlitze des Geräts NICHT abdecken, da eine ungenügende Luftzufuhr zur Beschädigung des Geräts führen kann.
- ➔ KEINE Gegenstände auf das Gerät legen. Das Gerät so platzieren, dass NIEMAND auf das Gerät treten kann.
- ➔ Vor Wartung oder Demontage immer das Ethernet- und Stromkabel vom Gerät trennen.
- ➔ Bei Beschädigung Stromzufuhr zum Gerät unterbrechen.
- ➔ KEINE Reparaturversuche unternehmen. Kontaktieren Sie Ihren Händler, um ein neues Gerät zu bestellen.
- ➔ Das Gerät oder die Einheit NICHT öffnen. Nach dem Öffnen oder Entfernen von Verkleidungen bestehen Risiken, z. B. durch gefährlich hohe Spannung. Dieses Gerät ist AUSSCHLIESSLICH durch qualifiziertes Servicepersonal zu warten oder zu deinstallieren. Kontaktieren Sie Ihren Händler für weitere Informationen.

Hiermit erklärt die AXING AG, dass die gekennzeichneten Produkte den geltenden Richtlinien entsprechen. Sie finden die vollständige EU-Konformitätserklärung zum Download indem Sie auf www.axing.com im Suchfeld den Artikel

WEEE Nr. DE26869279 | Elektrische und elektronische Komponenten nicht mit dem Restmüll, sondern separat entsorgen.

1. Produktbeschreibung

1.1. Lieferumfang

EoC 2-01

1 x EoC 2-01 Ethernet over Coax Modem

1 x Netzwerkkabel 1,5 m

1 x Stromversorgungskabel mit Eurostecker

1 x CFA 8-00 Abschlusswiderstand

1 x Bedienungsanleitung

EoC 2-00

2 x EoC 2-01 Modem

2 x Netzwerkkabel 1,5 m

2 x Stromversorgungskabel mit Eurostecker

2 x CFA 8-00 Abschlusswiderstand

2 x Bedienungsanleitung

Lieferbares Zubehör:

- IEC-Anschlusskabel 1,5…10 m — BAK 150-80 – 999-80
- Modem-Anschlusskabel 1,5…10 m — MAK 150-80 – 999-80
- Adapter F/IEC — CFA 1-00, IEC Buchse auf F-Stecker
- Adapter F/IEC — CFA 10-00, IEC Stecker auf F-Stecker
- Einspeiseweiche — TZU 40-03/-04

1.2. Verwendungsbereich

Das EoC 2-01 Modem ermöglicht die Einspeisung von IP-Datensignalen wie z. B. des Internets über einen Router in eine vorhandene koaxiale Antennenverteilung, wie z. B. SAT-ZF-, DVB-T, BK- oder Kopfstellen-Verteilsystemen (in Stern- oder Baumverteilung).

Der Vorteil einer Ethernet over Coax Lösung ist, dass keine neuen Netzwerkkabel verlegt werden müssen. Die Übertragung erfolgt im dämpfungsarmen Rückkanal-Frequenzbereich von 2…68 MHz. Je nach Güte des koaxialen Kabels können Übertragungsstrecken von bis zu 700 m realisiert werden.

Die Einspeisung erfolgt über den rückkanaltauglichen terrestrischen Eingang eines SAT-Multischalters, den terrestrischen Eingang einer Antennenverteilstruktur oder über eine rückkanaltaugliche Antennendose im Verteilnetz.

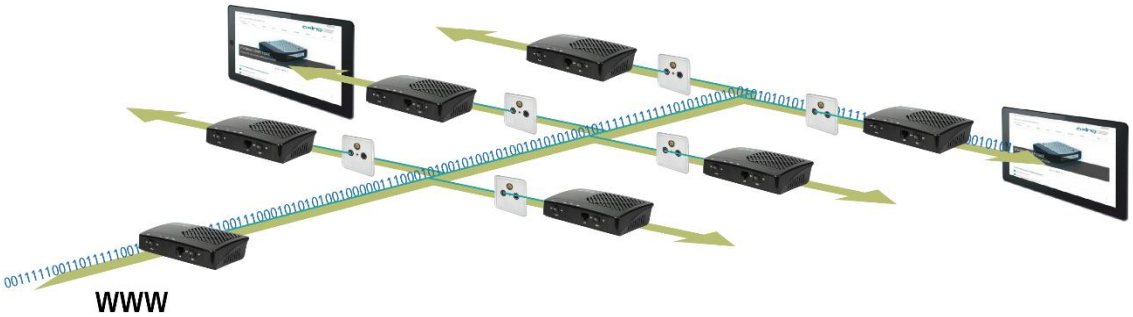

An rückkanaltauglichen Antennendosen stehen dann Internet- bzw. andere eingespeiste IP-Daten zur Verfügung (siehe 2.1 „Anschlussbeispiele an AXING-Antennendosen“ 12).

An einem EoC-Modem können zwei netzwerkfähige Geräte an den LAN-Anschlüssen angeschlossen werden. Das IP-Netzwerk kann auf bis zu 64 EoC-Geräte ausgebaut werden.

1.2.1. WiFi

Das EoC 2-01 WiFi-Modem hat einen integrierten Router mit WLAN-Funktion, womit Sie problemlos, schnell und einfach eine Internet Verbindung auf Smartphones, Tablets und allen anderen WLAN-Endgeräten hergestellt werden kann.

Als WLAN-Access-Point stellt das EoC 2-01 WiFi Modem die Kommunikation zwischen Ihren WLAN-Geräten und einem bestehenden LAN-Netzwerk her. Auf diese Weise können Sie beispielsweise im Handumdrehen Ihr Netzwerk auch auf solche Räume erweitern, die sonst nicht erreichbar wären.

1.2.2. Peer-to-Peer-Mode

Die EoC 2-01 Modems kommunizieren werkseitig im Peer-to-Peer-Mode. D. h., jedes Modem kann mit jedem Modem im Netz kommunizieren. Es werden Daten ausgetauscht, Netzwerkspiele übertragen, oder es kann auf einen zentralen Netzwerkdrucker zugegriffen werden. Zur Überwachung von Häusern, Innenräumen etc. lässt sich auch eine IP-Überwachungskamera über ein EoC Modem betreiben.

1.2.3. Master-Slave-Mode

Beim Master-Slave-Mode verbindet ein Master-Gerät bis zu 63 Slave-Geräte mit dem Internet. Eine Kommunikation zwischen den einzelnen Modems ist nicht möglich. Der Betrieb in Hotels oder Pensionen ist ein typischer Anwendungsfall für den Master-Slave-Mode. Wenden Sie sich zum Umstellen der EoC-Modems in den Master-Slave Mode an den technischen Support von AXING (www.axing.com | Technischer Support).

1.2.4. Kompatibilität

Die EoC-Geräte bauen mit Hilfe des G.hn-Standards ein Ethernet-over-Coax-Netzwerk über die Koaxialkabel der Hausinstallation auf. Bei der Auswahl der Geräte ist darauf zu achten, dass die Geräte miteinander kompatibel sind.

		EoC 1-11	EoC 2-11	EoC 20-01	EoC 20-02	EoC 1-01	EoC 2-01	EoC 10-01	EoC 10-02
Aktuelle Geräte	EoC 1-11	✔	✔	X	X	X	X	X	X
	EoC 2-11	✔	✔	X	X	X	X	X	X
	EoC 20-01	X	X	X	✔	X	X	X	X
	EoC 20-02	X	X	✔	X	X	X	X	X
abgesteuerte Geräte	EoC 1-01	X	X	X	X	✔	✔	X	X
	EoC 2-01	X	X	X	X	✔	✔	X	X
	EoC 10-01	X	X	X	X	X	X	X	✔
	EoC 10-02	X	X	X	X	X	X	✔	X

✔ = kompatibel

X = nicht kompatibel

1.3. Anschlüsse, Anzeigen, Bedienelemente

1. Power ON/OFF
2. LAN, RJ 45 Buchse
3. WiFi ON/OFF
4. EoC-F-Buchse 2-862 MHz (Daten 2-65 MHz)
5. TV-F-Buchse 85-862 MHz
6. EoC Reset-Taste
7. WiFi WPS/Reset-Taste
8. LAN, RJ 45 Buchse
9. Netzbuchse 110-230 V
10. Power-LED
11. EoC-LED
12. LAN-LED
13. WiFi-LED

An der TV-F-Buchse auf der Rückseite des EoC-Modem kann ein TV- oder Radiogerät angeschlossen werden. Der eingebaute Verteiler ist mit einem hochselektiven Filter bestückt, wodurch der TV-/Radioempfang nicht vom Datenverkehr gestört wird.

Wenn Sie die TV-Buchse nicht verwenden, schließen Sie diese mit dem beiliegenden Abschlusswiderstand CFA 8-00 ab!

1.4. Anwendungsbeispiele

Alle Komponenten in der Verteilstruktur müssen den Rückkanal-Frequenzbereich 2-68 MHz unterstützen. Dies gilt insbesondere für die SAT-Multischalter, das passive Verteilmaterial und für die Antennensteckdosen.

1.4.1. Internet vom Kabelnetzbetreiber

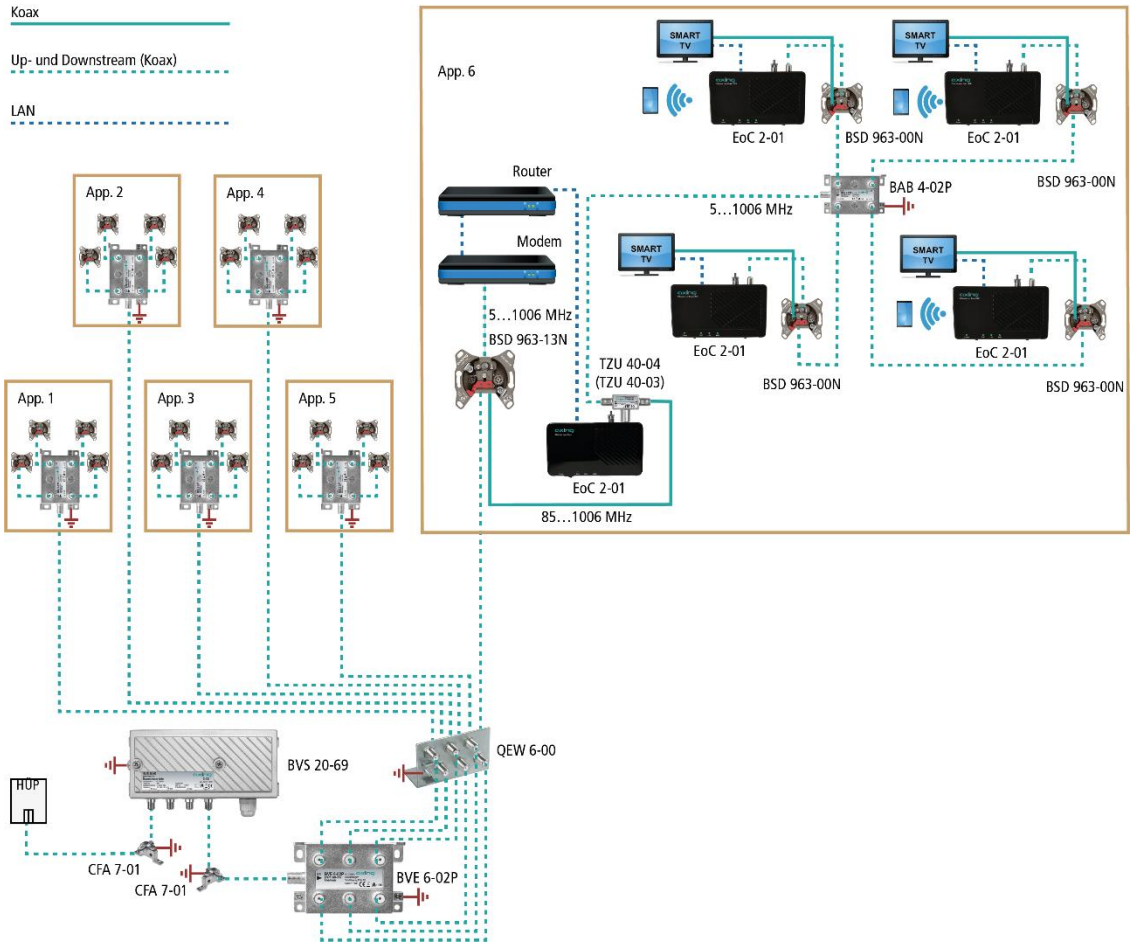

Die IP-Daten werden am Modem-Anschluss einer BSD 963-13 mit Hilfe eines Kabelmodems empfangen und über einen Router an ein EoC 2-01 weitergeleitet. Die IP-Daten werden anschließend über eine Einspeiseweiche TZU 40-04 in das Verteilnetz eingespeist und können an den anderen EoC-Modems empfangen werden.

Wichtig: Die Verwendung einer BSD 963-13N Antennensteckdose und einer Einspeiseweiche TZU 40-03/-04 ist verpflichtend, damit genügend Sperrtiefe für den Frequenzbereich von 5…65 MHz erreicht wird. Ansonsten kann es zu Störungen beim Kabelnetzbetreiber kommen.

1.4.2. Internet vom Telefonanbieter

Verstärker mit abschaltbaren Rückkanal

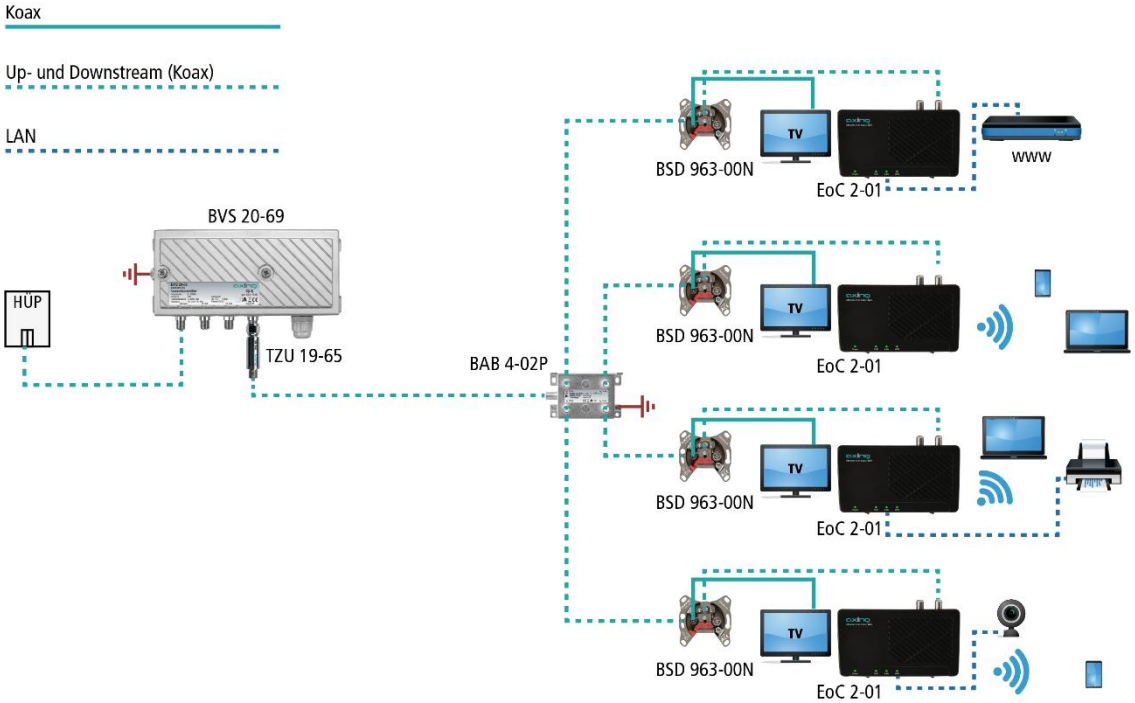

Die Einspeisung des IP-Signals erfolgt über eine **rückkanaltaugliche Antennendose**. Bei einer IP-Daten-Einspeisung über die Antennendose muss ein Hochpassfilter TZU 19-65 in die koaxiale Zuleitung (Verstärkerausgang) installiert werden.

Wichtig: Es muss ein Hochpassfilter TZU 19-65 in die koaxiale Zuleitung (Verstärkerausgang) installiert werden. Außerdem muss beim Verstärker der Rückkanal abgeschaltet werden, ansonsten kann es zu Störungen beim Kabelnetzbetreiber kommen.

Verstärker ohne abschaltbaren Rückkanal

Wenn die Abschaltung des Rückkanals nicht möglich ist, dann muss ein Hochpassfilter TZU 19-65 und eine Antennensteckdose BSD 963-13N am Ausgang des Verstärkers installiert werden.

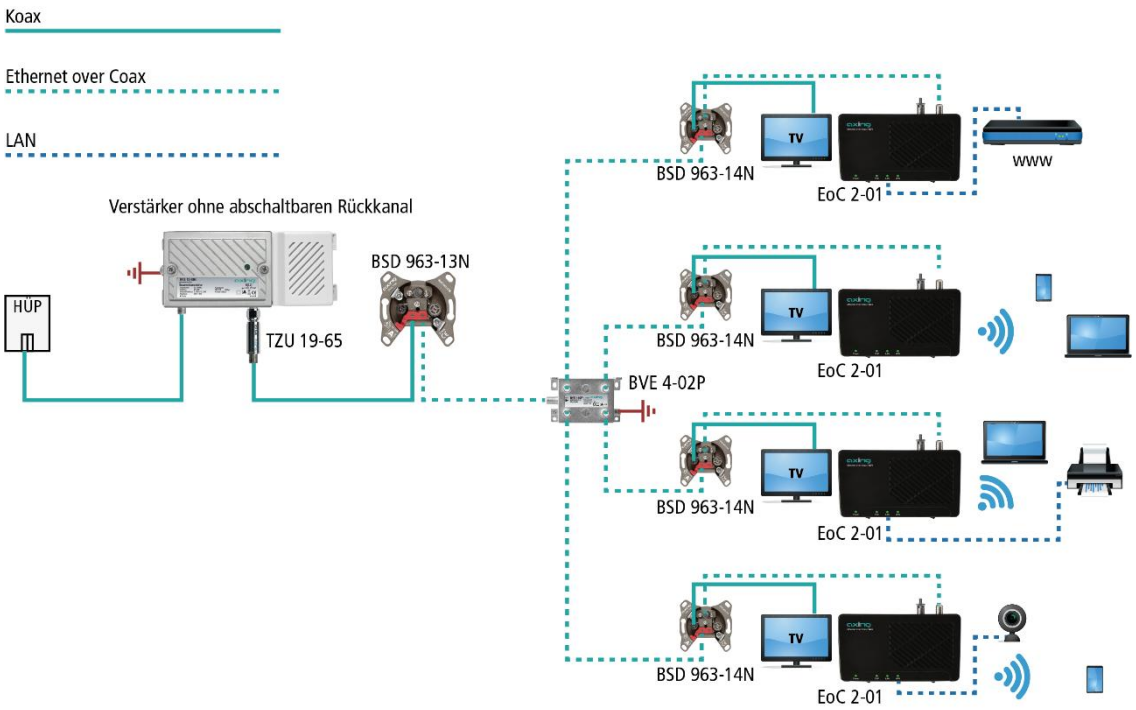

Wichtig: Die Verwendung einer BSD 963-13N Antennensteckdose und des Hochpassfilters TZU 19-65 ist verpflichtend, damit genügend Sperrtiefe für den Frequenzbereich von 5…65 MHz erreicht wird. Ansonsten kann es zu Störungen beim Kabelnetzbetreiber kommen.

1.4.3. Einspeisung in einer SAT-ZF-Verteilstruktur:

Zur Einspeisung in eine SAT-ZF-Verteilstruktur können ebenfalls IP-Signale vom Telefonanbieter oder vom Kabelnetzbetreiber verwendet werden.

Wichtig: Wenn zusätzlich CATV-Signale eines Kabelnetzbetreibers in den terrestrischen Zweig eingespeist werden, dann muss genügend Sperrtiefe für den Frequenzbereich von 5…65 MHz erreicht werden. Ansonsten kann es zu Störungen beim Kabelnetzbetreiber kommen. Gehen Sie dazu so vor, wie in den Beispielen für Verstärker mit oder ohne abschaltbaren Rückkanal gezeigt.

Über den terrestrischen Eingang des Multischalters

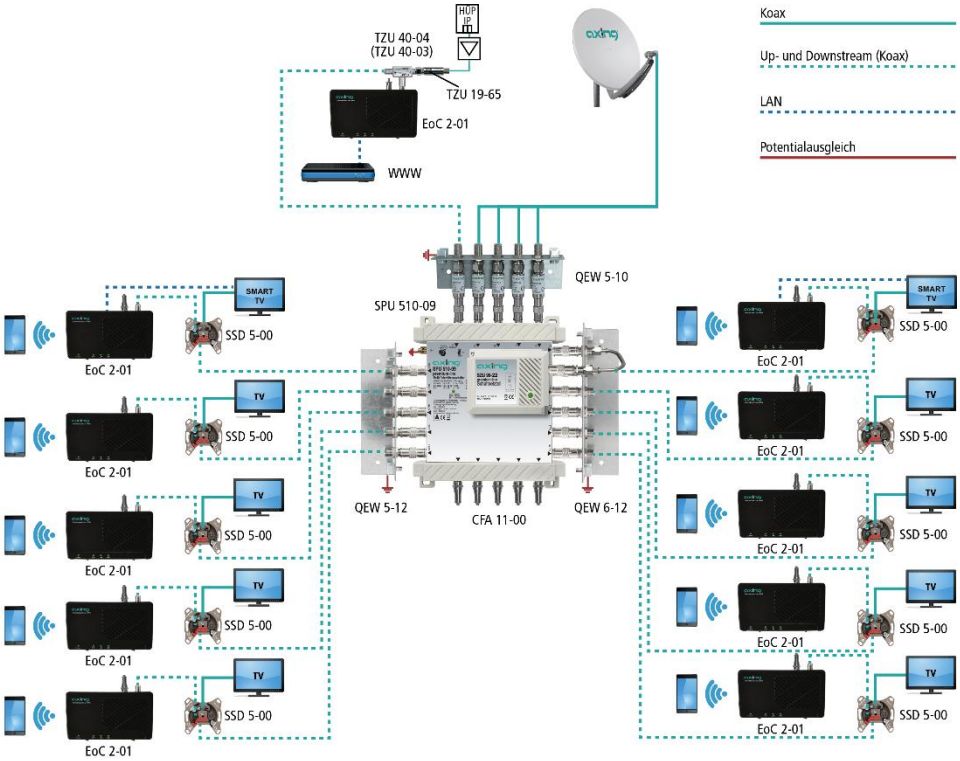

Über einen Teilnehmereingang eines Multischalters

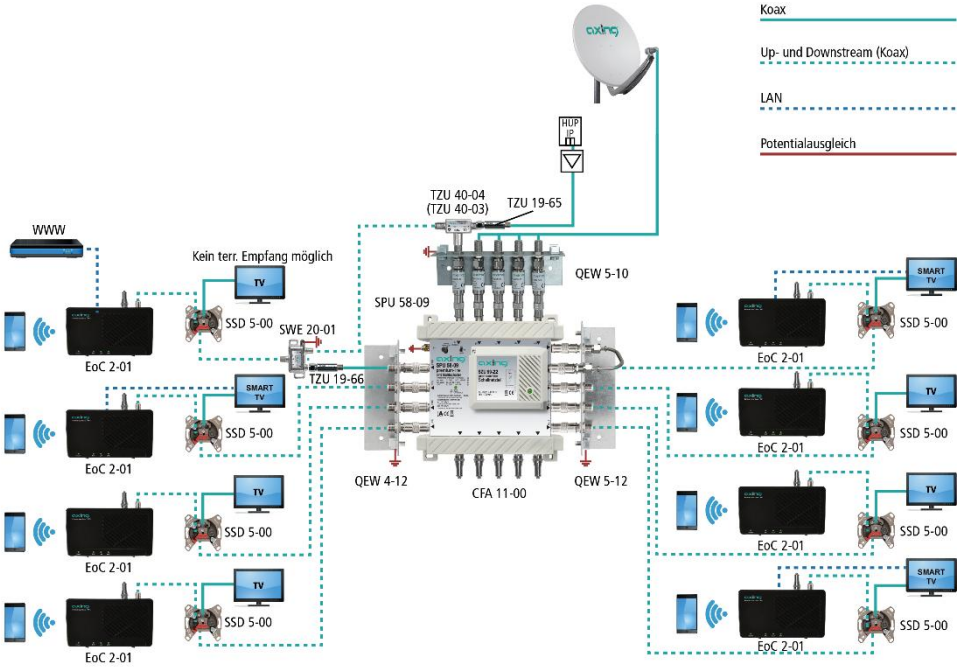

2. Installation und Inbetriebnahme

1. Verbinden Sie den Router mit dem beiliegenden Ethernet-Kabel an einer der beiden RJ-45 LAN- Buchsen des EoC-Modems.
2. Schließen Sie die EoC-F-Buchse an der vorhandenen Antennennetzstruktur an (siehe Beispiel 1 bis 4).

Es gibt mehrere Möglichkeiten, die IP-Daten in die vorhandene Antennennetzstruktur einzuspeisen.

- über eine rückkanaltaugliche Antennendose im Verteilnetz (siehe Beispiel 1 oder 3)
- über den passiven terrestrischen Eingang des SAT-Multischalters oder den passiven terrestrischen Eingang einer Verteilstruktur (siehe Beispiel 2 oder 4).

3. Verbinden Sie Ihren Computer mit dem beiliegenden Ethernet-Kabel an einer der beiden RJ-45 LAN-Buchsen des zweiten EoC-Modem.
4. Schließen Sie dann das EoC-Modem über die EoC-F-Buchse an der rückkanaltauglichen Antennensteckdose (siehe Beispiel 1 oder 3) oder an der rückkanaltauglichen EoC-Einspeiseweiche siehe Beispiel 2 oder 4) an.

➔Wiederholen Sie Schritt 3 + 4 für weitere Inbetriebnahmen von EoC 2-01.

Nachdem alle Verbindungen hergestellt wurden, können die EoC-Geräte mit dem Netzschalter eingeschaltet und die angeschlossenen Geräte (PC, Notebook etc.) hochgefahren werden.

Die LEDs Power, EoC, LAN und WiFi leuchten und der Datenverkehr ist hergestellt.

Hinweise:

- An einem EoC-Modem können bis zu 2 netzwerkfähige Geräte (ohne Switch) angeschlossen werden.
- Zusätzlich kann an der TV-F-Buchse des EoC-Modems ein TV- oder Radio-Gerät angeschlossen werden.

2.1. Anschlussbeispiele an AXING-Antennendosen

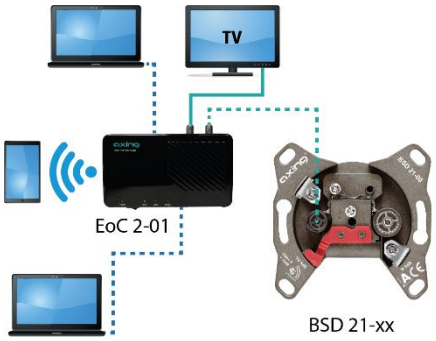

Koax
Coax
Up- und Downstream (Koax)
Up- and Downstream (Coax)
LAN

BSD 21-xx CATV-Antennensteckdosen

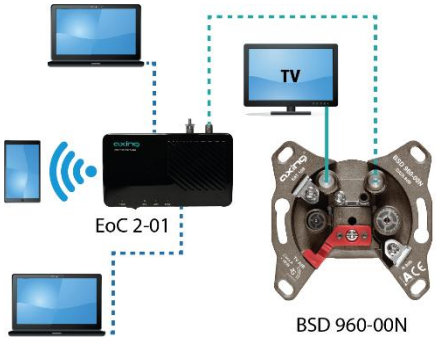

Koax
Coax
Up- und Downstream (Koax)
Up- and Downstream (Coax)
LAN

BSD 960-xxN Multimedia-Antennensteckdosen

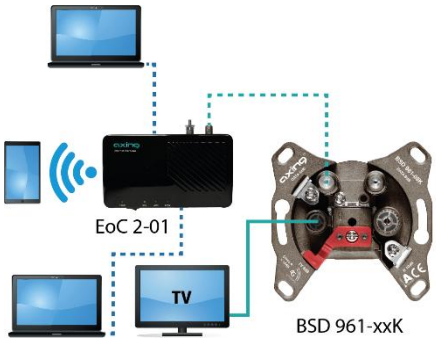

Koax
Coax
Up- und Downstream (Koax)
Up- and Downstream (Coax)
LAN

BSD 961-xxK Multimedia-Antennensteckdosen

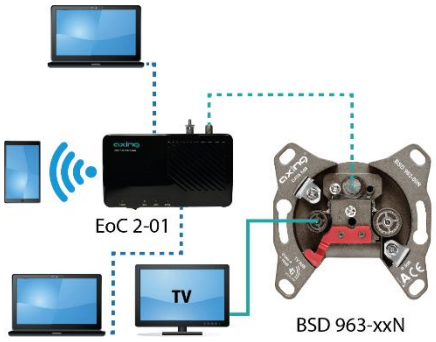

Koax
Coax
Up- und Downstream (Koax)
Up- and Downstream (Coax)
LAN

BSD 963-xxN Multimedia-Antennensteckdosen

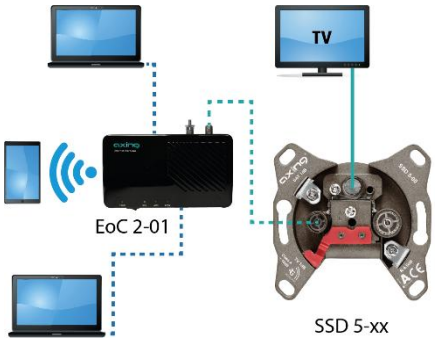

Koax
Coax
Up- und Downstream (Koax)
Up- and Downstream (Coax)
LAN

SSD 5-xx SAT-Antennensteckdose

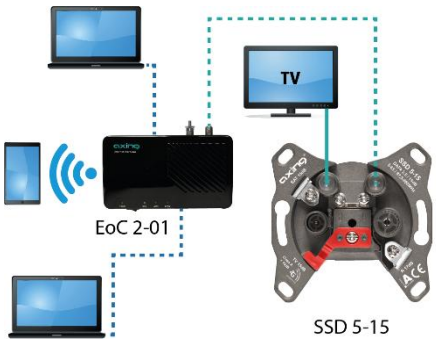

Koax
Coax
Up- und Downstream (Koax)
Up- and Downstream (Coax)
LAN

SSD 5-15 SAT-Multimedia-Antennensteckdose

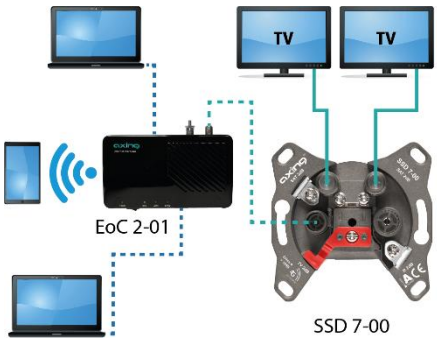

Koax
Coax
Up- und Downstream (Koax)
Up- and Downstream (Coax)
LAN

SSD 7-00 SAT-Twin-Antennensteckdose

3. Basisfunktionen

Nachdem Sie Ihr EoC-Modem eingeschaltet haben, sollten die LEDs folgenden Status anzeigen:

- Die Power-LED leuchtet grün.

Nach ca. 10 Sekunden leuchten/blinken die LEDs wie folgt:

- EoC-LED grün (blinkt bei Datenverkehr)
- LAN-LED grün (blinkt bei Datenverkehr)
- WiFi-LED grün (wenn WiFi eingeschaltet ist) grün (blinkt bei Datenverkehr)

3.1. Standby-Modus:

Das EoC-Modem schaltet nach einigen Minuten ohne Datenverkehr in den Standby-Modus. Die Power-LED blinkt dann grün.

3.2. EoC-Reset-Taste:

Mit der EoC-Reset-Taste können Sie folgende Funktionen durchführen:

auf Werkseinstellung zurückgesetzt (> 10 s drücken)

die Netzwerkkennung eines EoC-Modems löschen (5…8 s drücken)

ein privates Netzwerk erzeugen (<1 s drücken)

3.3. EoC Reset Funktion:

Halten Sie die EoC-Reset-Taste mit einer Büroklammer 10 Sekunde gedrückt, um das Gerät auf die Werkseinstellung zurückzusetzen.

Die EoC-Reset-Taste hat im Standby-Modus keine Funktion.

3.4. WiFi WPS/Reset-Taste:

Mit der WiFi WPS/Reset-Taste wird der WiFi-Router auf die Werks-IP Adresse 192.168.100.111 zurück gesetzt.

Die WiFi WPS/Reset-Taste hat im Standby-Modus keine Funktion.

3.5. WiFi-Zugang:

Den WiFi-Schalter auf ON schalten. WiFi ist aktiv:

Netzwerkname (SSID) = EoCxxxxxx

(xxxxxx = letzte sechs Zeichen der MAC-Adresse, diese finden Sie auf dem Typenschild)

Verschlüsselung = WPA2

Kennwort = 0000000000000000

Zur Verschlüsselung ist WPA2 aktiv

Das werkseitig eingestellte Kennwort für den WiFi-Zugang lautet: 0000000000000000.

Sie sollten das Standard-Kennwort ändern, um Ihr WiFi-Netztwerk abzusichern (siehe 5.3.2 auf Seite 19).

4. EoC-Netzwerk mit Verschlüsselung

Ein EoC-Netzwerk besteht aus zwei oder mehreren (maximal 64) EoC-Modems, die denselben Netzwerkschlüssel verwenden.

In einer vorhandenen Mehrteilnehmer-Antennenanlage können sich alle Geräte miteinander verbinden. Sie sollten deswegen ein privates EoC-Netzwerk aufbauen.

Durch die Absicherung Ihres EoC-Netzwerkes, schützen Sie die Informationen, die Sie über das Netzwerk versenden, vor ungewolltem Zugriff. Dies ist besonders in Mehrfamilienhäusern, Bürogebäuden, Schulen und anderen Gebäuden relevant.

Es gibt zwei Möglichkeiten, um Ihr EoC-Netzwerk abzusichern:

- Mit der EoC-Reset-Taste generieren Sie automatisch einen zufälligen Netzwerkschlüssel.
- Über die Security-Software legen Sie einen Schlüssel für Ihr EoC-Netzwerk fest (kostenloser Download unter http://www.axing.com | Download).

4.1. Paar- bzw. Gruppenbildung:

Löschen des Netzwerkschlüssels:

Wenn Sie einen individuellen Netzwerkschlüssel generieren wollen, dann löschen Sie zunächst den werkseitig eingestellten. Drücken Sie die EoC-Reset-Taste an der Rückseite des EoC-Gerätes 5…8 Sekunden (bis die Power-LED blinkt). Führen Sie dies bei allen Geräten durch.

Paar- bzw. Gruppenbildung

Drücken Sie kurz (<1 s) die EoC-Reset-Taste an der Rückseite des EoC-Gerätes. Die Power-LED fängt an zu blinken. Drücken Sie jetzt beim nächsten EoC-Modem ebenfalls kurz die EoC-Reset-Taste. Es wird ein neuer Netzwerkschlüssel zwischen den beiden EoC-Modems generiert und die Geräte verbinden sich miteinander. Die EoC LED blinkt kurzzeitig auf.

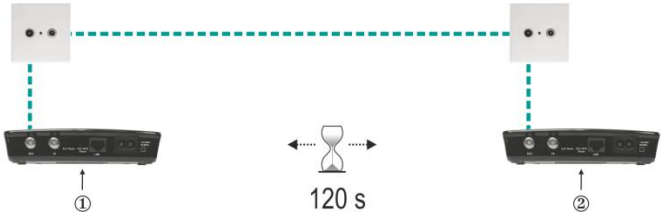

Um beide Geräte miteinander zu verbinden, haben Sie ca. 2 Minuten Zeit, um am zweiten Gerät die EoC-Reset-Taste zu drücken.

Überprüfen Sie die LEDs an den beiden EoC-Geräten. Die Power-LEDs sollten blinken, während die Geräte verbunden werden. Warten Sie etwa eine Minute, während sich die EoC-Geräte verbinden. Nach Abschluss des Vorgangs leuchten beide Power- und EoC LEDs.

Wenn die Power-LED nicht blinkt, nachdem Sie die EoC-Reset-Taste gedrückt haben, haben Sie diese u. U. zu lange gedrückt.

Versuchen Sie es erneut und drücken Sie die EoC-Reset-Taste <1 Sekunde lang.

Sollten die EoC-LEDs an beiden EoC-Geräten nicht leuchten, sind die EoC-Geräte nicht verbunden. Wiederholen Sie die Schritte in diesem Abschnitt.

5. Einstellungen für das WiFi-Netzwerk

Das EoC 2-01 WiFi-Modem wird über einen Web-Browser konfiguriert. Die Werks-IP-Adresse lautet 192.168.100.111 und die Subnetz-Maske 255.255.255.0.

Mit der WiFi WPS/Reset-Taste wird der WiFi-Router auf die Werks-IP Adresse 192.168.100.111 zurück gesetzt. Drücken Sie die WiFi WPS/Reset-Taste mindestens 10 Sekunden. Anschließend schalten Sie das Gerät aus und wieder ein. Das Gerät ist jetzt wieder im Auslieferungszustand.

5.1. Zugriff auf die Konfigurationsseite

➔ Änderung Sie die IP-Adresse Ihres PC/Laptop z.B. auf 192.168.100.11:
Systemsteuerung > Netzwerkverbindungen > LAN Verbindung >Eigenschaften > Internetprotokoll Version 4 TCP/IPv4 > Eigenschaften > Folgende IP-Adresse verwenden:
Klicken Sie OK zum Speichern.

➔ Schließen Sie das EoC 2-01 mit einem LAN-Patchkabel am PC/Laptop an.

➔ Geben Sie jetzt IP-Adresse 192.168.100.111 in den Web Browser ein.
Ein Dialog zur Benutzer- und Kennwort-Eingabe öffnet sich.

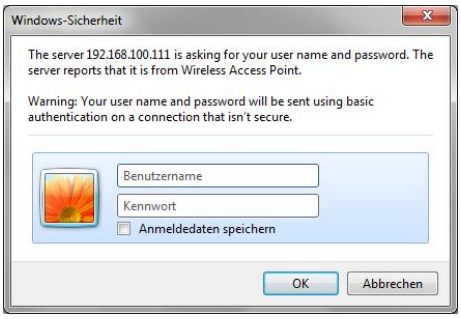

5.1.1. Login

Die Konfigurationsoberfläche des EoC 2-01 ist mit einem Kennwort *geschützt*.

➔ Geben Sie den Benutzernamen *admin* und anschließend das werkseitig eingestellte Kennwort *000000* ein.

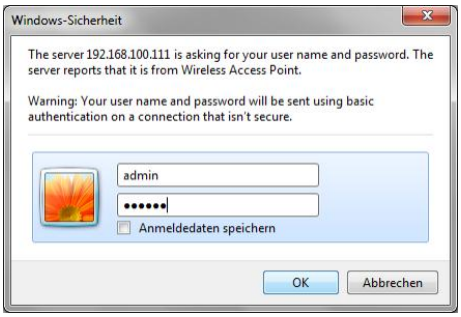

Hinweis: Ändern Sie das werkseitig eingestellte Passwort (siehe 5.5.7 auf Seite 24).

➔ Klicken Sia auf OK.
Das Fenster Wireless AP Router öffnet sich.

5.2. Operation Mode

Die Hauptseite „Setup Wizard“ bietet die grundlegenden Einstellungen für den Betriebsmodus des Wi-Fi-Moduls.

Nachdem Sie eine der folgenden Optionen ausgewählt haben, werden Sie durch den Installationsvorgang geleitet.

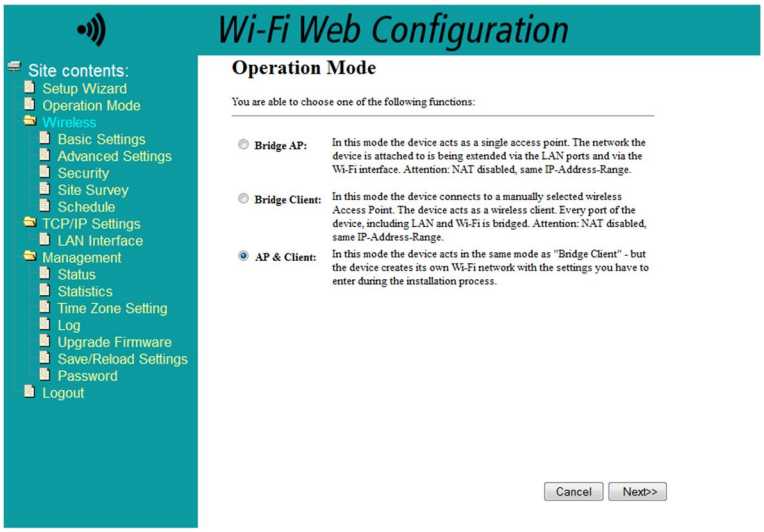

Sie haben die Wahl aus den folgenden Funktionen:

Bridge AP

In diesem Modus fungiert das Gerät als singulärer Access Point. Das Netzwerk, mit welchem das EoC 2-01 verbunden ist, wird erweitert – zum einen durch die LAN Ports (das EoC 2-01 fungiert hier als Switch), den EoC-Anschluss und via Wi-Fi-Interface.

Wenn die EoC-Funktion aktiviert ist, wird das EoC-Netzwerk ebenso gebridged. Das bedeutet, dass jedes Gerät, das mit dem EoC 2-01 Netzwerk verbunden wird, automatisch Teil des Netzwerkes wird, zu welchem das EoC-Gerät gehört.

Achtung: NAT ist deaktiviert, es handelt sich um denselben IP-Adress-Bereich. Sollte ein DHCP-Server im bestehenden Netzwerk vorhanden sein, ordnet dieser auch IP-Adressen im Netzwerk des EoC 2-01 zu. Es wird hierbei kein separater netzwerk-interner DHCP-Server benötigt.

Bridge Client

In diesem Modus verbindet sich das Gerät mit einem manuell auszuwählenden Wireless Access Point. Das EoC-Gerät fungiert hierbei als Wireless Client des bestehenden Netzwerks.
Jeder Port des EoC 2-01, einschließlich LAN und Wi-Fi wird hierbei gebridged. Jedes Gerät, welches mit dem Netzwerk des EoC verbunden wird, wird somit automatisch Teil des Netzwerks, mit dem das EoC-Gerät verbunden ist.

Achtung: NAT ist deaktiviert, es handelt sich um denselben IP-Adress-Bereich. Sollte ein DHCP-Server im bestehenden Netzwerk vorhanden sein, ordnet dieser auch IP-Adressen im Netzwerk des EoC 2-01 zu. Es wird hierbei kein separater Netzwerk-interner DHCP-Server.

Achtung: Der EoC 2-01 kann sich in diesem Modus nicht zu bestehenden Netzwerken verbinden, die WPA als Verschlüsselungstyp einsetzen.

AP & Client

In diesem Modus fungiert das Gerät als „Bridge Client“ mit der Besonderheit, dass das EoC 2-01 ebenfalls ein eigenes Wi-Fi Netzwerk zur Verfügung stellt mit den Einstellungen, die Sie in der folgenden Maske händisch festlegen können. Hierbei wählen Sie auch aus, zu welchem Netzwerk Sie sich verbinden möchten. Die Weboberfläche bietet Ihnen hierzu eine Übersicht („Wireless Site Survey“) am entsprechenden Punkt des Konfigurationsassistenten an.

Achtung: Bei Nutzung dieser Funktion, arbeitet der AP des EoC 2-01 im gleichen Kanal wie die Basis des zu erweiternden Netzwerkes.

5.3. Wireless Settings

5.3.1. Wireless Basic Settings

Auf dieser Seite werden die Einstellungen für den lokalen Wi-Fi Access Point festgelegt.

Achtung: Nur Wi-Fi im 2,4 GHz-Modus wird unterstützt!

Im „Modus“-Menü können Sie entscheiden, ob das Gerät als „AP“ (Access Point), „Client“ (eines anderen Wi-Fi-Netzwerks) oder im Modus „AP + WDS“ fungieren soll.

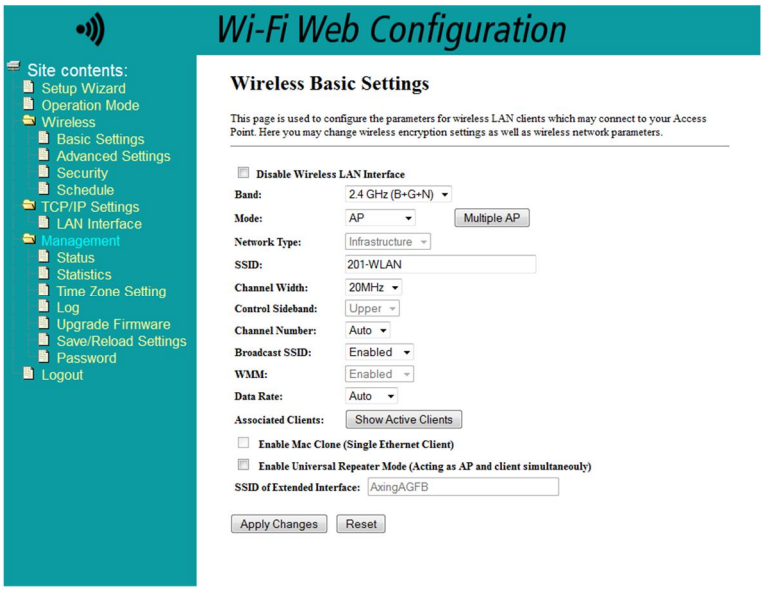

5.3.2. Wireless Security Setup

Auf dieser Seite werden die Einstellungen für die Wireless-Sicherheit konfiguriert.

Bitte beachten Sie, dass ausschließlich WPA & WPA2 sichere Optionen darstellen (WEP gilt als sicherheitsanfällig). Die Nutzung von WPA2-AES (kein „Mixed Mode“) wird von uns empfohlen. Der Schlüssel muss aus mindestens acht Zeichen bestehen.

Nutzen Sie hierzu Buchstaben- und Zahlenkombinationen in Groß- und Kleinschreibung.

5.3.3. Wireless Site Survey

Bevor Sie die Einstellungen übernehmen können, müssen Sie auswählen, zu welchem Wi-Fi Netzwerk sich das EoC 2-01 Gerät verbinden soll.

Sie können eine erneute Suche über den „Site Survey“ Button im oberen Bereich der Seite starten.

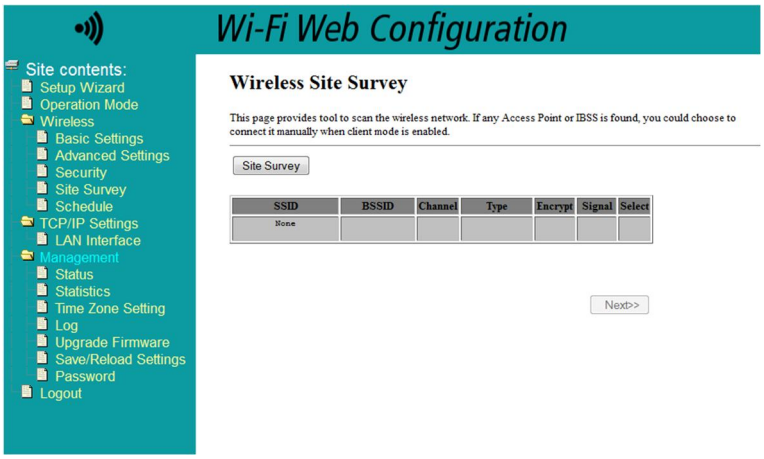

5.3.4. Wireless Advanced Settings

Erweiterte Einstellungen bzgl. Wi-Fi können hier gesetzt werden.

Beispielsweise können Sie hier den „RF Output Power“, welcher direkt mit der Reichweite der Wi-Fi-Abdeckung korreliert, festlegen.

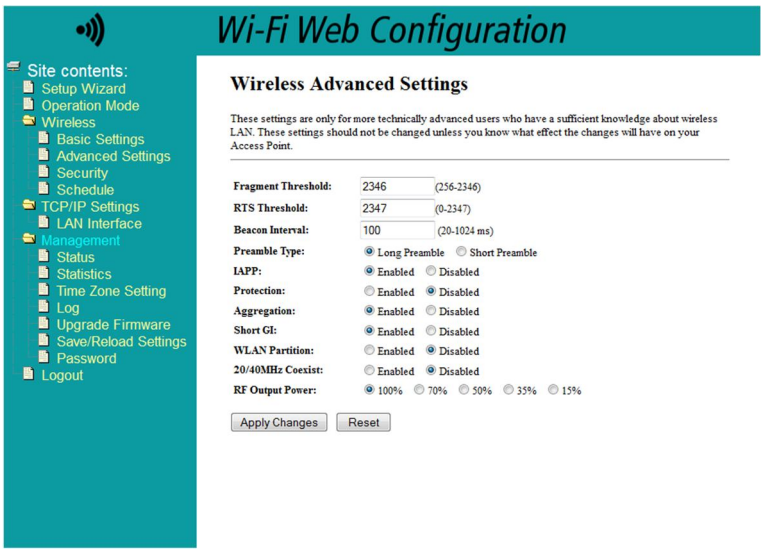

5.3.5. Wireless Schedule

Die Funktion „Wireless Schedule“ erlaubt es dem Nutzer, die Zeiten festzulegen, zu welchen die Wi-Fi Funktion deaktiviert werden soll. Beispielsweise lässt sich so Wi-Fi über Nacht deaktivieren.

Diese Funktion ist werksseitig deaktiviert.

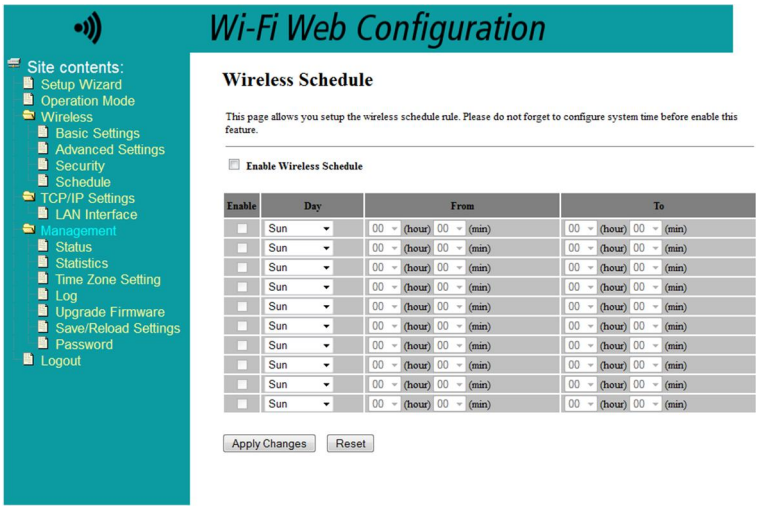

5.4. TCP/IP Settings

5.4.1. LAN Interface Setup

Auf dieser Seite können Sie IP-Adresse und Subnetzmaske Ihres lokalen EoC 2-01-Gerätes festlegen.

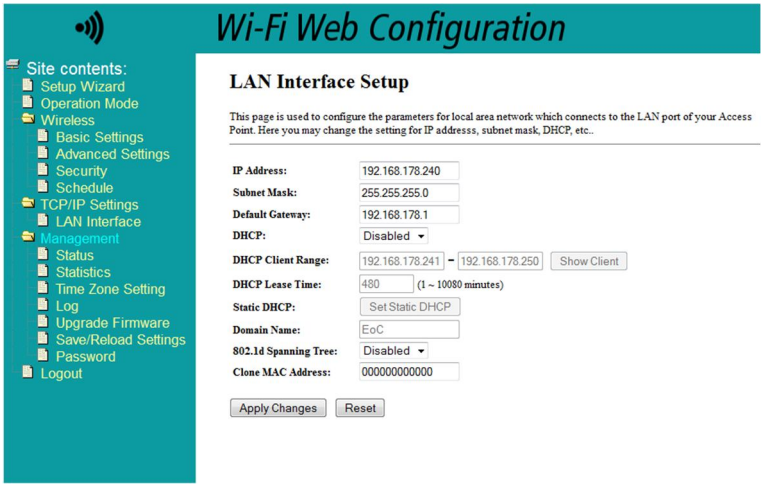

5.5. Management

5.5.1. Access Point Status

Die Status-Übersicht stellt grundlegende Informationen über das System, die Wi-Fi Verbindung und die LAN-Verbindung dar.

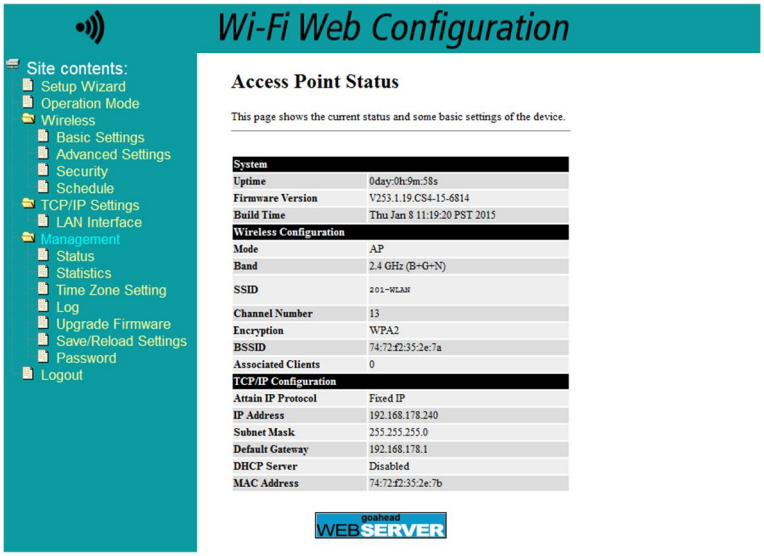

5.5.2. Statistics

Diese Seite zeigt einen Überblick über die gesendeten / empfangenen Pakete in den einzelnen Netzwerken an.

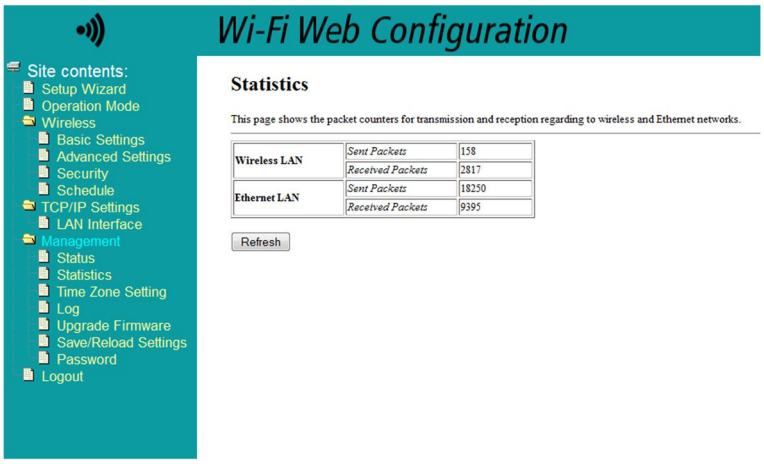

5.5.3. Time Zone Setting

Sowohl Zeit, Datum als auch Zeitzone können hier festgelegt werden.

Optional kann hier auch ein NTP-Server (Network Time Protocol) hinzugefügt werden.

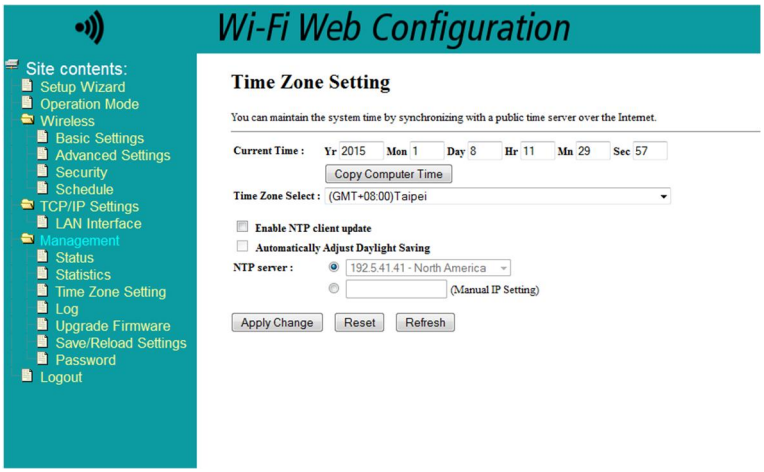

5.5.4. System Log

Auf dieser Seite können Sie das aktuelle System-Log einsehen.

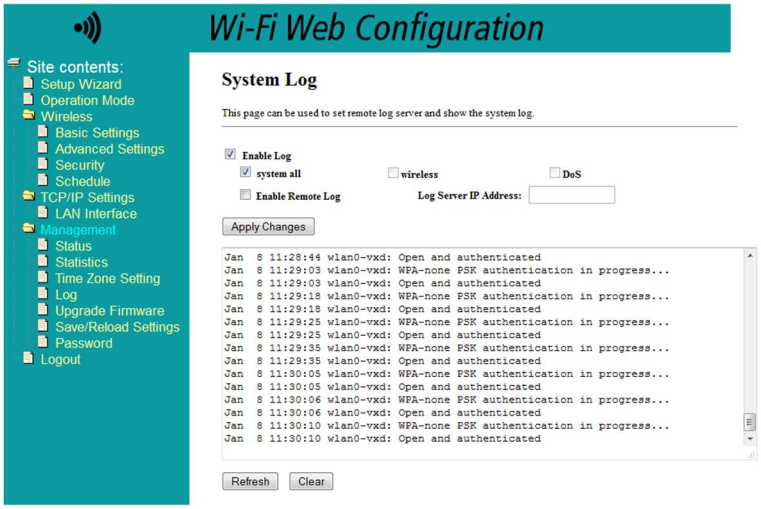

5.5.5. Upgrade Firmware

Diese Seite ermöglicht Ihnen, neu veröffentlichte Firmware Updates zu installieren.

Im Falle eines verfügbaren Updates erhalten Sie separat detaillierte Informationen zum weiteren Ablauf des Updates. Beachten Sie, dass es unter Umständen notwendig sein kann, nach dem Update den Browser-Cache zu leeren, um alle neuen Funktionen nutzen zu können.

Updates finden Sie unter der Rubrik „Downloads“ auf unserer Webseite http://www.axing.com/.

5.5.6. Save / Reload Settings

Auf dieser Seite können Sie die aktuelle Konfiguration in eine Datei auf Ihren lokalen Computer herunterladen.

Es ist außerdem möglich, eine Konfiguration wiederherzustellen oder die Werkseinstellungen zu laden.

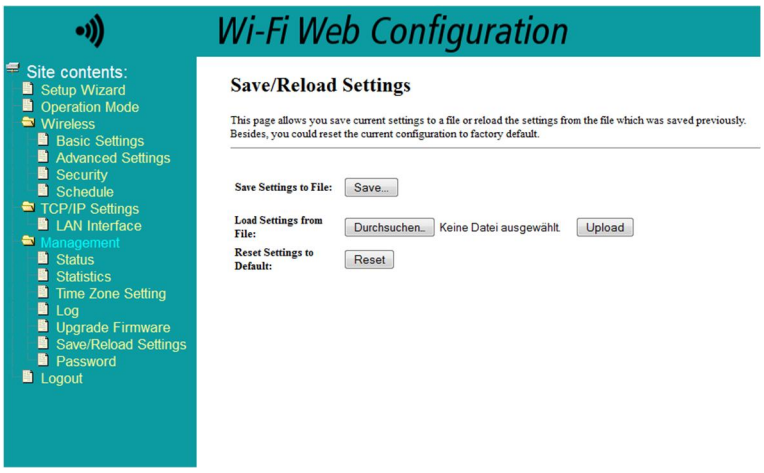

5.5.7. Password Setup

Diese Seite erlaubt es Ihnen, das für die Weboberfläche benutzte Passwort zu ändern.

Die Standardeinstellungen sind:

- Benutzername: admin
- Passwort: 000000

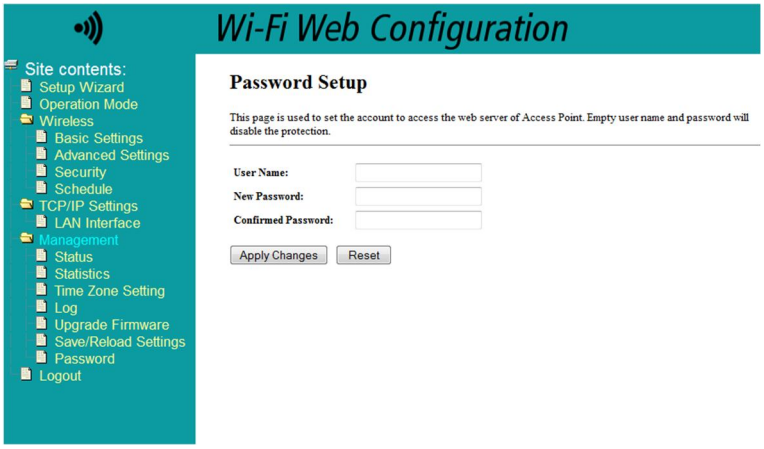

Hinweis: Ändern Sie das werkseitig eingestellte Passwort!

6. Fehlerbehebung

6.1. LEDs

Die LEDs zeigen „Aktivität" an und dienen zur Fehlerbehebung.

Power-LED aus

➔ Stellen Sie sicher, dass das Netzkabel richtig angeschlossen ist.
➔ Stellen Sie sicher, dass das EoC-Modem mit dem Netzschalter eingeschaltet ist.

LAN-LED blinkt nicht

Kein Datentransfer. Überprüfen Sie Folgendes:
➔ Sind Ihr Router und Modem eingeschaltet?
➔ Ist das Ethernet-Kabel fest mit einem LAN-Port des Routers/Modems verbunden?
➔ Kann ein direkt mit dem Router verbundene PC auf das Internet zugreifen?
➔ Drücken Sie die EoC-Reset-Taste an jedem EoC-Modem 10 Sekunden lang, um die Werkseinstellungen des EoC-Modems wiederherzustellen.
➔ Generieren Sie ggf. einen neuen Netzwerkschlüssel (siehe Kapitel 4 auf Seite 15).

EoC-LED aus – leuchtet nicht

Die EoC-Geräte finden sich nicht.
➔ Stellen Sie sicher, dass die EoC-Geräte an das gleiche Antennennetzwerk angeschlossen sind und dass sie denselben Netzwerkschlüssel verwenden.
➔ Positionieren Sie das EoC-Modem etwas näher am Computer oder EoC-Modem.
➔ Wenn Sie die Netzwerksicherheit aktiviert haben, stellen Sie sicher, dass sämtliche EoC-Modems denselben Netzwerkschlüssel verwenden.
➔ Wenn das Problem auftritt, nachdem Sie den Netzwerkschlüssel geändert haben, stellen Sie die Werkseinstellungen jedes Geräts wieder her. Danach können Sie den Netzwerkschlüssel erneut erzeugen (siehe Kapitel 4 auf Seite 15).
➔ Prüfen Sie, ob ihre Antennenanlage rückkanaltauglich ist.

EoC-LED leuchtet rot

➔ Die Leitungsdämpfung zwischen den EoC-Modems ist zu hoch. Positionieren Sie das EoC-Modem etwas näher an das Master-Gerät.

7. Technische Daten

7.1. Datenblatt

Frequenzbereich	
EoC-Ein-/Ausgang	2…1006 MHz
IP-Signal	2…68 MHz
TV-Ausgang	85…1006 MHz
Durchgangsdämpfung	<0,5 dB
Ausgangspegel min. 1…30 MHz	100 dBµV
Ausgangspegel min. 30…68 MHz	90 dBµV
Netzwerk	Bis zu 64 EoC-Modems
Brutto Datenrate	500 Mbps
Netto Datenrate	230 Mbps
Reichweite	bis zu 700 m
Modulation	4096/1024/256/64/16/8-QAM, QPSK, BPSK und ROBO Modulationschema
Verschlüsselung	128 bit AES
Ethernet-Schnittstelle	10/100/1000 Mbps
Netzwerkstandard	Home Plug AV IEEE1901, IEEE802.3, IEEE802.3u
WiFi-Netzwerkstandard	IEEE 802.11/b/g/n
Frequenzbereich	13 channels 2.412GHz~2.472GHz
Anschlüsse (TV/EoC)	2 x F-Buchse
Anschlüsse (LAN)	2 x RJ 45
LEDs:	Power /EoC /LAN/WiFi
Schaltnetzteil	110-230 V~ 50/60 Hz
Leistungsaufnahme	max. 5,5 W
Betriebstemperatur	0°C ~ 40°C
Abmessungen	145 (B) x 82,5 (T) x 33 (H) mm
Entspricht den Normen	EN 50083-2 Klasse A

7.2. Bohrschablone

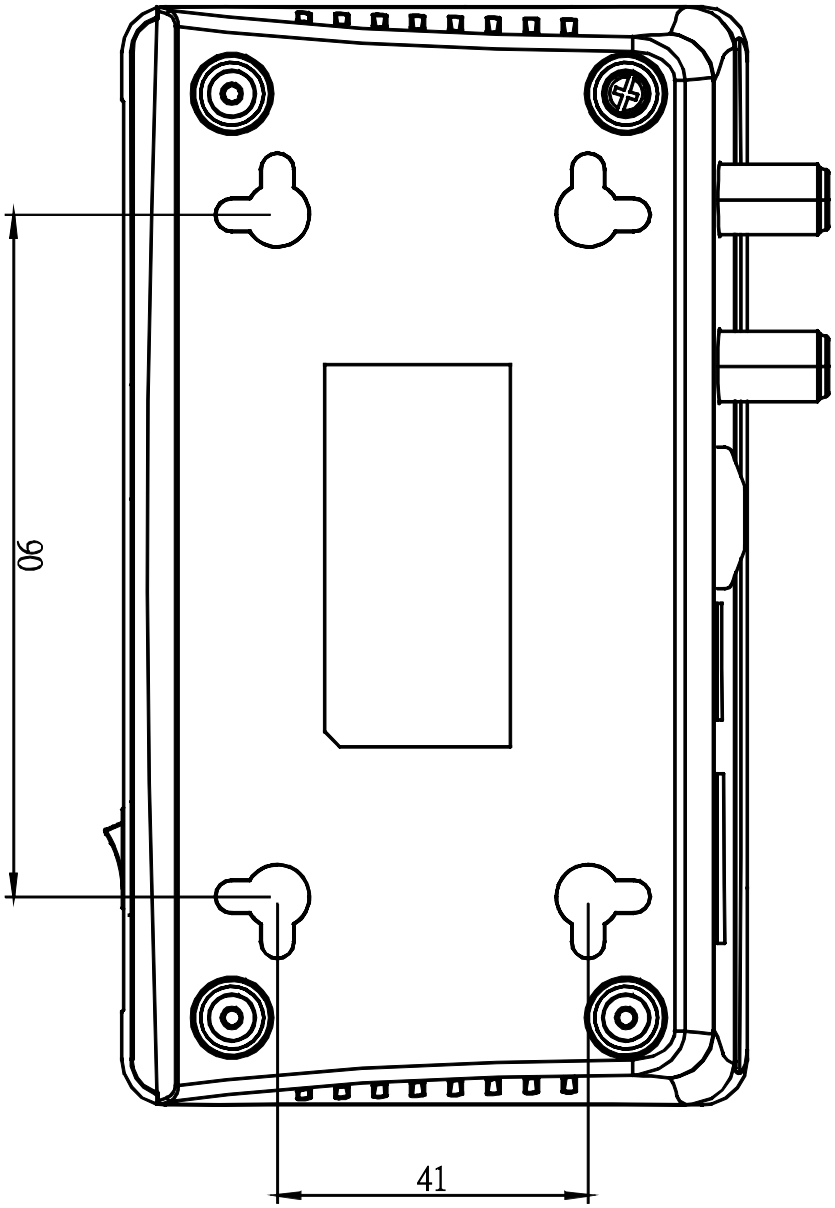

8. Verwendete Open Source Software

GNU GENERAL PUBLIC LICENSE

Version 2, June 1991

51 Franklin Street, Fifth Floor, Boston, MA 02110-1301, USA

Preamble

The licenses for most software are designed to take away your freedom to share and change it. By contrast, the GNU Gen- eral Public License is intended to guarantee your freedom to share and change free software--to make sure the software is free for all its users. This General Public License applies to most of the Free Software Foundation's software and to any other program whose authors commit to using it. (Some other Free Software Foundation software is covered by the GNU Lesser General Public License instead.) You can apply it to your programs, too.

When we speak of free software, we are referring to freedom, not price. Our General Public Licenses are designed to make sure that you have the freedom to distribute copies of free software (and charge for this service if you wish), that you receive source code or can get it if you want it, that you can change the software or use pieces of it in new free programs; and that you know you can do these things.

To protect your rights, we need to make restrictions that forbid anyone to deny you these rights or to ask you to surrender the rights. These restrictions translate to certain responsibilities for you if you distribute copies of the software, or if you modify it.

For example, if you distribute copies of such a program, whether gratis or for a fee, you must give the recipients all the rights that you have. You must make sure that they, too, receive or can get the source code. And you must show them these terms so they know their rights.

We protect your rights with two steps: (1) copyright the software, and (2) offer you this license which gives you legal permission to copy, distribute and/or modify the software.

Also, for each author's protection and ours, we want to make certain that everyone understands that there is no warranty for this free software. If the software is modified by someone else and passed on, we want its recipients to know that what they have is not the original, so that any problems introduced by others will not reflect on the original authors' reputations. Finally, any free program is threatened constantly by software patents. We wish to avoid the danger that redistributors of a free program will individually obtain patent licenses, in effect making the program proprietary. To prevent this, we have made it clear that any patent must be licensed for everyone's free use or not licensed at all.

The precise terms and conditions for copying, distribution and modification follow.

TERMS AND CONDITIONS FOR COPYING, DISTRIBUTION AND MODIFICATION

1. This License applies to any program or other work which contains a notice placed by the copyright holder saying it may be distributed under the terms of this General Public License. The "Program", below, refers to any such program or work, and a "work based on the Program" means either the Program or any derivative work under copyright law: that is to say, a work containing the Program or a portion of it, either verbatim or with modifications and/or translated into another language. (Hereinafter, translation is included without limitation in the term "modification".) Each licensee is ad- dressed as "you". Activities other than copying, distribution and modification are not covered by this License; they are outside its scope. The act of running the Program is not restricted, and the output from the Program is covered only if its contents constitute a work based on the Program (independent of having been made by running the Program). Whether that is true depends on what the Program does.

2. You may copy and distribute verbatim copies of the Program's source code as you receive it, in any medium, provided that you conspicuously and appropriately publish on each copy an appropriate copyright notice and disclaimer of war- ranty; keep intact all the notices that refer to this License and to the absence of any warranty; and give any other recipients of the Program a copy of this License along with the Program.
   You may charge a fee for the physical act of transferring a copy, and you may at your option offer warranty protection in exchange for a fee.
3. You may modify your copy or copies of the Program or any portion of it, thus forming a work based on the Program, and copy and distribute such modifications or work under the terms of Section 1 above, provided that you also meet all of these conditions:

a) You must cause the modified files to carry prominent notices stating that you changed the files and the date of any change.

b) You must cause any work that you distribute or publish, that in whole or in part contains or is derived from the Program or any part thereof, to be licensed as a whole at no charge to all third parties under the terms of this License.

c) If the modified program normally reads commands interactively when run, you must cause it, when started running for such interactive use in the most ordinary way, to print or display an announcement including an appropriate copy- right notice and a notice that there is no warranty (or else, saying that you provide a warranty) and that users may redistribute the program under these conditions, and telling the user how to view a copy of this License. (Exception: if the Program itself is interactive but does not normally print such an announcement, your work based on the Program is not required to print an announcement.)
   These requirements apply to the modified work as a whole. If identifiable sections of that work are not derived from the Program, and can be reasonably considered independent and separate works in themselves, then this License, and its terms, do not apply to those sections when you distribute them as separate works. But when you distribute the same sec- tions as part of a whole which is a work based on the Program, the distribution of the whole must be on the terms of this License, whose permissions for other licensees extend to the entire whole, and thus to each and every part regardless of who wrote it. Thus, it is not the intent of this section to claim rights or contest your rights to work written entirely by you; rather, the intent is to exercise the right to control the distribution of derivative or collective works based on the Program.
   In addition, mere aggregation of another work not based on the Program with the Program (or with a work based on the Program) on a volume of a storage or distribution medium does not bring the other work under the scope of this License.

4. You may copy and distribute the Program (or a work based on it, under Section 2) in object code or executable form under the terms of Sections 1 and 2 above provided that you also do one of the following:

a) Accompany it with the complete corresponding machine-readable source code, which must be distributed under the terms of Sections 1 and 2 above on a medium customarily used for software interchange; or,

b) Accompany it with a written offer, valid for at least three years, to give any third party, for a charge no more than your cost of physically performing source distribution, a complete machine-readable copy of the corresponding source code, to be distributed under the terms of Sections 1 and 2 above on a medium customarily used for software inter- change; or,

c) Accompany it with the information you received as to the offer to distribute corresponding source code. (This alterna- tive is allowed only for noncommercial distribution and only if you received the program in object code or executable form with such an offer, in accord with Subsection b above.)
   The source code for a work means the preferred form of the work for making modifications to it. For an executable work, complete source code means all the source code for all modules it contains, plus any

associated interface definition files, plus the scripts used to control compilation and installation of the executable. However, as a special exception, the source code distributed need not include anything that is normally distributed (in either source or binary form) with the major components (compiler, kernel, and so on) of the operating system on which the executable runs, unless that component itself accompanies the executable.
If distribution of executable or object code is made by offering access to copy from a designated place, then offering equivalent access to copy the source code from the same place counts as distribution of the source code, even though third parties are not compelled to copy the source along with the object code.

5. You may not copy, modify, sublicense, or distribute the Program except as expressly provided under this License. Any attempt otherwise to copy, modify, sublicense or distribute the Program is void, and will automatically terminate your rights under this License. However, parties who have received copies, or rights, from you under this License will not have their licenses terminated so long as such parties remain in full compliance.
6. You are not required to accept this License, since you have not signed it. However, nothing else grants you permission to modify or distribute the Program or its derivative works. These actions are prohibited by law if you do not accept this License. Therefore, by modifying or distributing the Program (or any work based on the Program), you indicate your ac- ceptance of this License to do so, and all its terms and conditions for copying, distributing or modifying the Program or works based on it.
7. Each time you redistribute the Program (or any work based on the Program), the recipient automatically receives a license from the original licensor to copy, distribute or modify the Program subject to these terms and conditions. You may not impose any further restrictions on the recipients' exercise of the rights granted herein. You are not responsible for enforcing compliance by third parties to this License.
8. If, as a consequence of a court judgment or allegation of patent infringement or for any other reason (not limited to patent issues), conditions are imposed on you (whether by court order, agreement or otherwise) that contradict the condi- tions of this License, they do not excuse you from the conditions of this License. If you cannot distribute so as to satisfy simultaneously your obligations under this License and any other pertinent obligations, then as a consequence you may not distribute the Program at all. For example, if a patent license would not permit royalty-free redistribution of the Program by all those who receive copies directly or indirectly through you, then the only way you could satisfy both it and this License would be to refrain entirely from distribution of the Program.
If any portion of this section is held invalid or unenforceable under any particular circumstance, the balance of the section is intended to apply and the section as a whole is intended to apply in other circumstances.
It is not the purpose of this section to induce you to infringe any patents or other property right claims or to contest validity of any such claims; this section has the sole purpose of protecting the integrity of the free software distribution system, which is implemented by public license practices. Many people have made generous contributions to the wide range of software distributed through that system in reliance on consistent application of that system; it is up to the author/donor to decide if he or she is willing to distribute software through any other system and a licensee cannot impose that choice. This section is intended to make thoroughly clear what is believed to be a consequence of the rest of this License.
9. If the distribution and/or use of the Program is restricted in certain countries either by patents or by copyrighted inter- faces, the original copyright holder who places the Program under this License may add an explicit geographical distribu- tion limitation excluding those countries, so that distribution is permitted only in or among countries not thus excluded. In such case, this License incorporates the limitation as if written in the body of this License.
10. The Free Software Foundation may publish revised and/or new versions of the General Public License from time to time. Such new versions will be similar in spirit to the present version, but may differ in detail to address new problems or concerns.
Each version is given a distinguishing version number. If the Program specifies a version number of this

License which ap- plies to it and "any later version", you have the option of following the terms and conditions either of that version or of any later version published by the Free Software Foundation. If the Program does not specify a version number of this License, you may choose any version ever published by the Free Software Foundation.

11. If you wish to incorporate parts of the Program into other free programs whose distribution conditions are different, write to the author to ask for permission. For software which is copyrighted by the Free Software Foundation, write to the Free Software Foundation; we sometimes make exceptions for this. Our decision will be guided by the two goals of pre- serving the free status of all derivatives of our free software and of promoting the sharing and reuse of software generally.

NO WARRANTY

12. BECAUSE THE PROGRAM IS LICENSED FREE OF CHARGE, THERE IS NO WARRANTY FOR THE PROGRAM, TO THE EXTENT PERMITTED BY APPLICABLE LAW. EXCEPT WHEN OTHERWISE STATED IN WRITING THE COPYRIGHT HOLDERS AND/OR OTHER PARTIES PROVIDE THE PROGRAM "AS IS" WITHOUT WARRANTY OF ANY KIND, EITHER EXPRESSED OR IMPLIED, INCLUDING, BUT NOT LIMITED TO, THE IMPLIED WARRANTIES OF MERCHANTABILITY AND FITNESS FOR A PARTICULAR PURPOSE. THE ENTIRE RISK AS TO THE QUALITY AND PERFORMANCE OF THE PROGRAM IS WITH YOU. SHOULD THE PROGRAM PROVE DEFECTIVE, YOU ASSUME THE COST OF ALL NECESSARY SERVICING, REPAIR OR CORRECTION.

13. IN NO EVENT UNLESS REQUIRED BY APPLICABLE LAW OR AGREED TO IN WRITING WILL ANY COPYRIGHT HOLDER, OR ANY OTHER PARTY WHO MAY MODIFY AND/OR REDISTRIBUTE THE PROGRAM AS PERMITTED ABOVE, BE LIABLE TO YOU FOR DAMAGES, INCLUDING ANY GENERAL, SPECIAL, INCIDENTAL OR CONSEQUENTIAL DAM- AGES ARISING OUT OF THE USE OR INABILITY TO USE THE PROGRAM (INCLUDING BUT NOT LIMITED TO LOSS OF DATA OR DATA BEING RENDERED INACCURATE OR LOSSES SUSTAINED BY YOU OR THIRD PARTIES OR A FAILURE OF THE PROGRAM TO OPERATE WITH ANY OTHER PROGRAMS), EVEN IF SUCH HOLDER OR OTHER PARTY HAS BEEN ADVISED OF THE POSSIBILITY OF SUCH DAMAGES.

END OF TERMS AND CONDITIONS

Hersteller | Manufacturer
AXING AG
Gewerbehaus Moskau
8262 Ramsen

EWR-Kontaktadresse | EEA contact address
Bechler GmbH
Am Rebberg 44
78239 Rielasingen

Competence in Communication Technologies

EoC 2-01

Ethernet over Coax | WiFi

Operation Instructions

KLASSE A CLASS

WiFi

Contents

Safety instructions

- ➔ Do NOT use the device near water or in rooms with high humidity such as humid cellars or near swimming pools.
- ➔ Do NOT use the device outdoors. All connections must be located inside a building.
- ➔ Keep the device away from moisture, dust or corrosive liquids.
- ➔ Do NOT install the device, use it or perform maintenance during a thunderstorm. There is a risk of electric shock during thunderstorm.
- ➔ Connect ONLY appropriate accessories to the device.
- ➔ Make sure that all cables are connected to the correct port.
- ➔ Carefully lay the Ethernet, antenna and electric cables to ensure that nobody can step on or stumble over them.
- ➔ Do NOT cover the ventilation slots of the device since insufficient air supply may result in damage to the device.
- ➔ Do NOT place any objects on the device. Position the device in a place where NOBODY can step on it.
- ➔ Prior to maintenance or dismounting work, disconnect the Ethernet and electric cable from the device.
- ➔ In case of damage, interrupt the power supply.
- ➔ Do NOT try to repair the device. Contact your local retailer to order a new device.
- ➔ Do NOT open the device or unit. Opening the device or removing its covers causes risks, for example due to high voltage. This device should ONLY be repaired or uninstalled by qualified service personnel. For more information, contact your retailer.

Herewith AXING AG declares that the marked products comply with the valid guidelines. You can call up the complete EU declaration of conformity for download by entering the article in the search field at www.axing.com.

WEEE Nr. DE26869279 | Electrical and electronic components must not be disposed of as residual waste, it must be disposed of separately.

1. Product description

1.1. Scope of delivery

EoC 2-01

1 x EoC 2-01 Ethernet over Coax Modem

1 x Network cable 1.5 m (RJ45)

1 x Power cable with euro plug

1 x CFA 8-00 terminating resistor

1 x Quick Start Guide

EoC 2-00

2 x EoC 2-01 Ethernet over Coax Modem

2 x Network cable 1.5 m (RJ45)

2 x Power cable with euro plug

2 x CFA 8-00 terminating resistor

2 x Quick Start Guide

Lieferbares Zubehör:

- IEC connecting cable 1.5…10 m BAK 150-80 – 999-80
- Modem connecting cable 1.5…10 m MAK 150-80 – 999-80
- Adapter F/IEC CFA 1-00, IEC socket / F plug
- Adapter F/IEC CFA 10-00, IEC plug / F plug
- Combiner TZU 40-03/-04

1.2. Field of application

The EoC 2-01 modem allows feeding in of IP data signals from the Internet, for example via a router in an existing coaxial antenna distributor, such as SAT-IF-, DVB-T, CATV- or head end distribution systems (in the star or tree distribution).

The advantage of an ethernet solution over a coax solution is that no new network cables must be laid. The data is transmitted through the low-attenuation return channel, frequency range of 2...68 MHz. Depending on the quality of the coaxial cable, transmission distances of up to 700 m can be realized.

The feeding in is performed via the return channel capable terrestrial input of the SAT multiswitch, via the terrestrial input of the antenna distributor structure or via a return channel capable antenna socket in the distribution network.

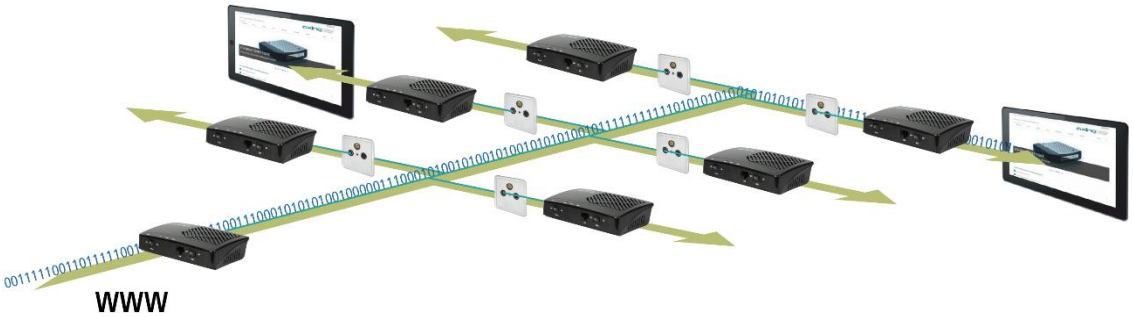

Internet or other fed IP data are available at return channel capable antenna sockets (see 2.1 "Connection examples for AXING antenna wall outlets" on page 11).

Two networkable devices can be connected to the LAN ports of a EoC modem. The IP network can be extended to up to 64 EoC devices.

1.2.1. WiFi

The EoC 2-01 WiFi modem has an integrated router with WLAN function which allows you to establish an internet connection on smart phones, tablet PCs and any other WLAN end devices without any problems, quickly and easily.

The EoC 2-01 WiFi modem as WLAN access point establishes communication between your WLAN devices and an existing LAN network. In this way for example you can instantly extend your network to include even rooms which would not be accessible otherwise.

1.2.2. Peer-to-Peer mode

The Eoc 2-01 modems communicates per default in a Peer-to-Peer mode. This means that each modem can communicate with each modem in the network. Data is exchanged, network games are transmitted or a centralized network printer can be accessed. For the monitoring of houses, rooms etc., an IP camera can be operated via a EoC modem.

1.2.3. Master/Slave mode

In the master/slave mode one master device connects up to 63 slave devices with the internet. Communication between the modems isn´t possible. The applikation in hotels or boarding houses ar typical uses of the master/slave mode. Please contact the technical support of AXING, to change from the peer-to-peer mode to the master/salve mode (www.axing.com | Technischer Support).

1.2.4. Compatibility

The EoC devices build an Ethernet-over-coax network over the coaxial infrastructur by using the G.hn standard.
When selecting devices, make sure that they are compatible with each other.

		EoC 1-11	EoC 2-11	EoC 20-01	EoC 20-02	EoC 1-01	EoC 2-01	EoC 10-01	EoC 10-02
Current devices	EoC 1-11	✔	✔	X	X	X	X	X	X
	EoC 2-11	✔	✔	X	X	X	X	X	X
	EoC 20-01	X	X	X	✔	X	X	X	X
	EoC 20-02	X	X	✔	X	X	X	X	X
Expired devices	EoC 1-01	X	X	X	X	✔	✔	X	X
	EoC 2-01	X	X	X	X	✔	✔	X	X
	EoC 10-01	X	X	X	X	X	X	X	✔
	EoC 10-02	X	X	X	X	X	X	✔	X

✔ = compatible

X = not compatible

1.3. Connections, indications, operating elements

1. Power ON/OFF
2. LAN, RJ 45 socket
3. WiFi ON/OFF
4. EoC F socket 2-862 MHz (data 2-65 MHz)
5. TV F socket 85-862 MHz
6. EoC Reset button
7. WiFi WPS/Reset button
8. LAN, RJ 45 socket
9. Mains socket 110-230 V
10. Power LED
11. EoC LED
12. LAN LED
13. WiFi LED

A TV or radio device can be connected to the TV-F socket on the rear side of the EoC modem. The integrated distributor is equipped with a highly selective filter so that the TV/radio reception is not interfered with by the data traffic.

If the TV F socket ist not used, the socket has to be terminated with an termination resistor CFA 8-00!

1.4. Application examples

All components in the distribution structure must support the return channel frequency range 2-68 MHz. This also applies to SAT multiswitches, the passive distribution components and for antenna sockets.

1.4.1. Internet from the cable network operator

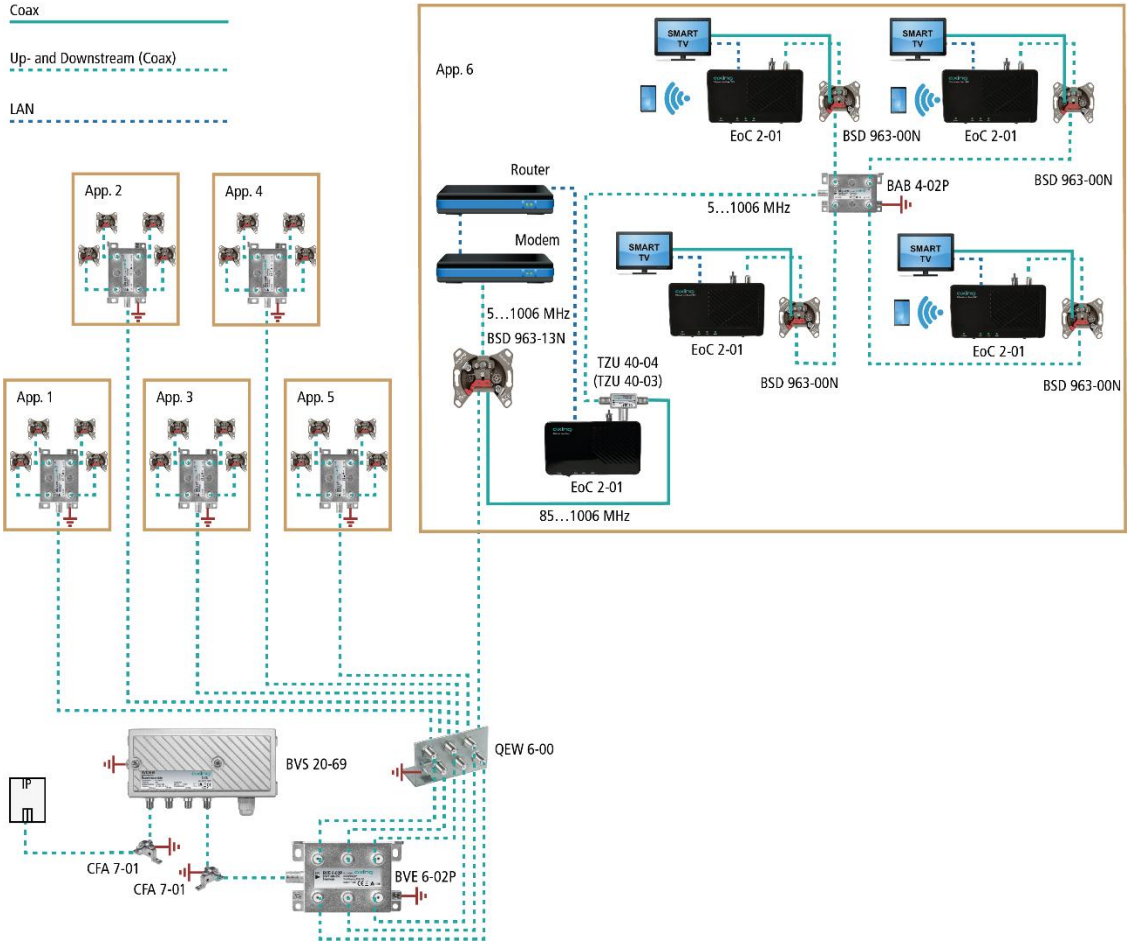

IP data from a network operator: The IP data are received with a cable modem at the modem connector of a BSD 963-13 antenna wall outlet. The cable modem ist connected to an EoC 2-01 via LAN. The IP data is feed in via an EOC inserter (TZU 40-04) into the distribution network and can be received from the other EoC.

Important: The use of a BSD 963-13N antenna socket and a TZU 40-03/-04 inserter is mandatory in order to achieve sufficient blocking depth for the frequency range from 5...65 MHz. Otherwise it may cause interferences in the cable network.

1.4.2. Internet from the telephone provider

The feeding of the IP signal is performed via **the return channel capable antenna socket.**

Amplifier with switchable return path

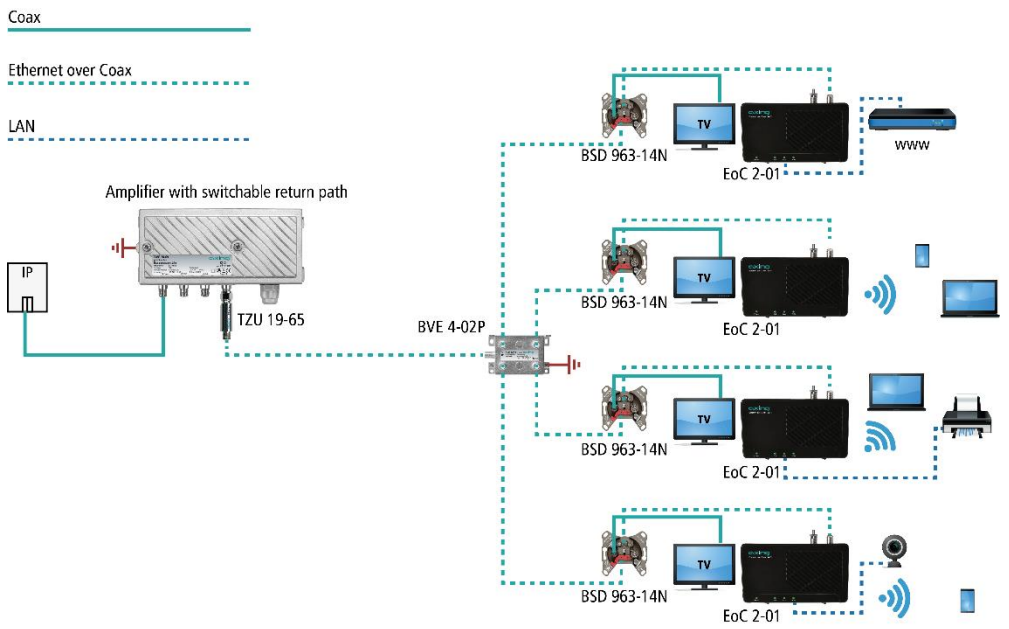

Important: A high-pass filter TZU 19-65 must be installed in the coaxial feed line (at amplifier output). In addition, the return path of the amplifier must be switched off. Otherwise it may cause interferences in the cable network.

Amplifier without switchable return path

If it is not possible to switch off the return path, a high-pass filter TZU 19-65 and a BSD 963-13N antenna wall outlet must be installed at the output of the amplifier.

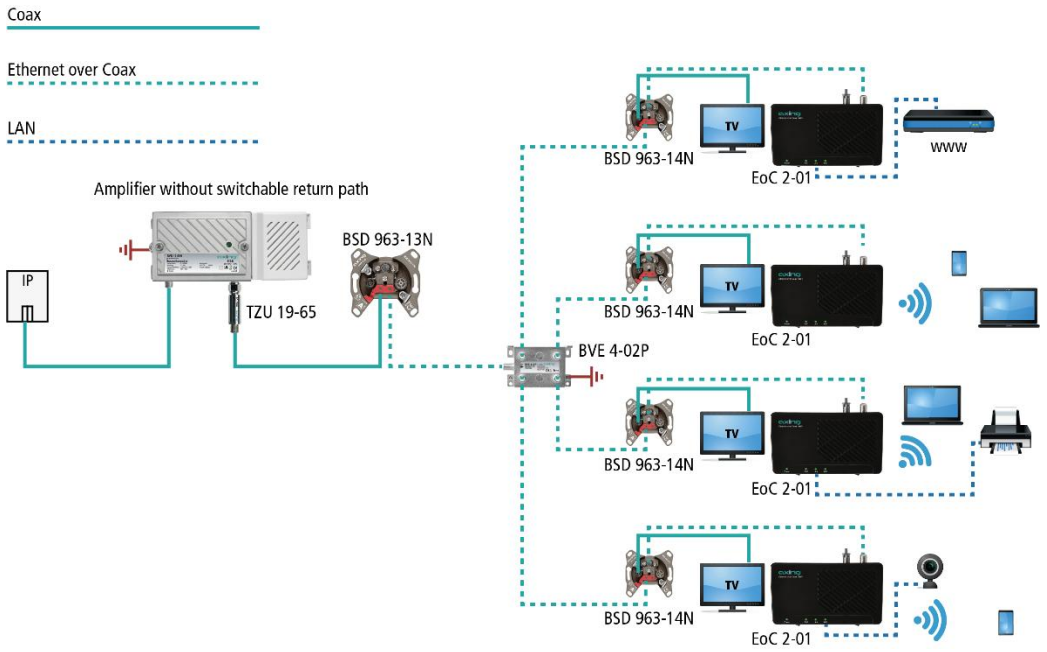

Important: The use of a BSD 963-13N antenna socket and the high-pass filter TZU 19-65 is mandatory in order to achieve sufficient blocking depth for the frequency range from 5...65 MHz. Otherwise it may cause interferences in the cable network.

1.4.3. Feeding in of IP data in a SAT-IF distribution structure

Important: If additional CATV signals of a cable operator are fed into the terrestrial branch, then sufficient locking depth for the frequency range of 5 ... 65 MHz must be achieved. Otherwise it may cause interferences in the cable network. Proceed as shown in the examples for amplifiers with or without switchable return path.

Via a terrestrial input of a multiswich

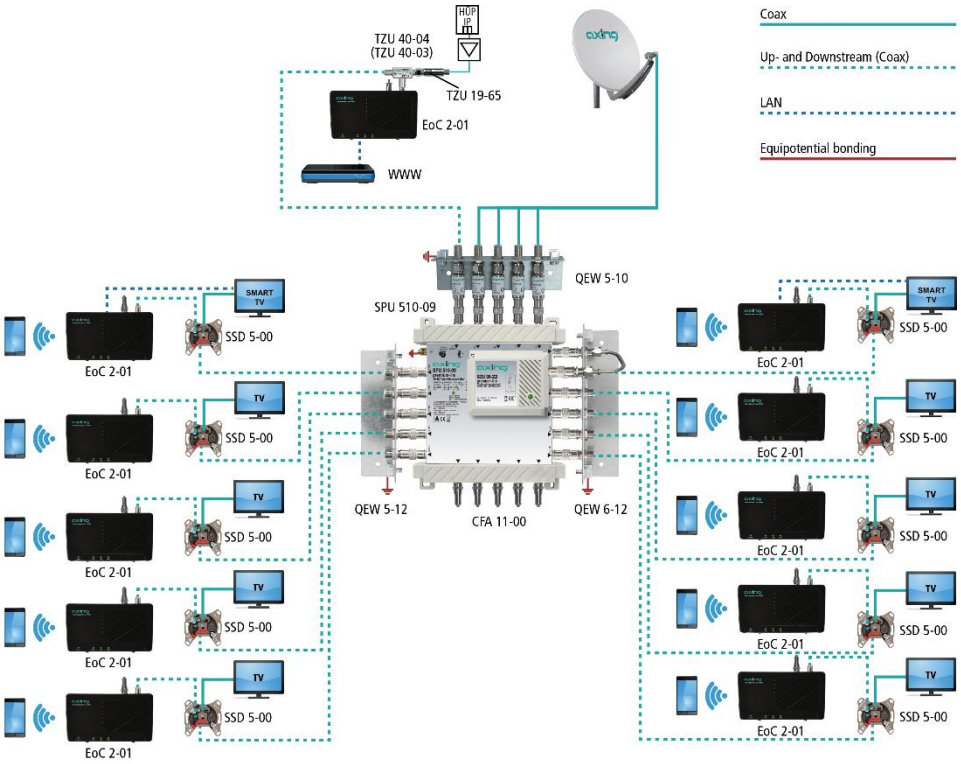

Via a subscriber input of a multiswich

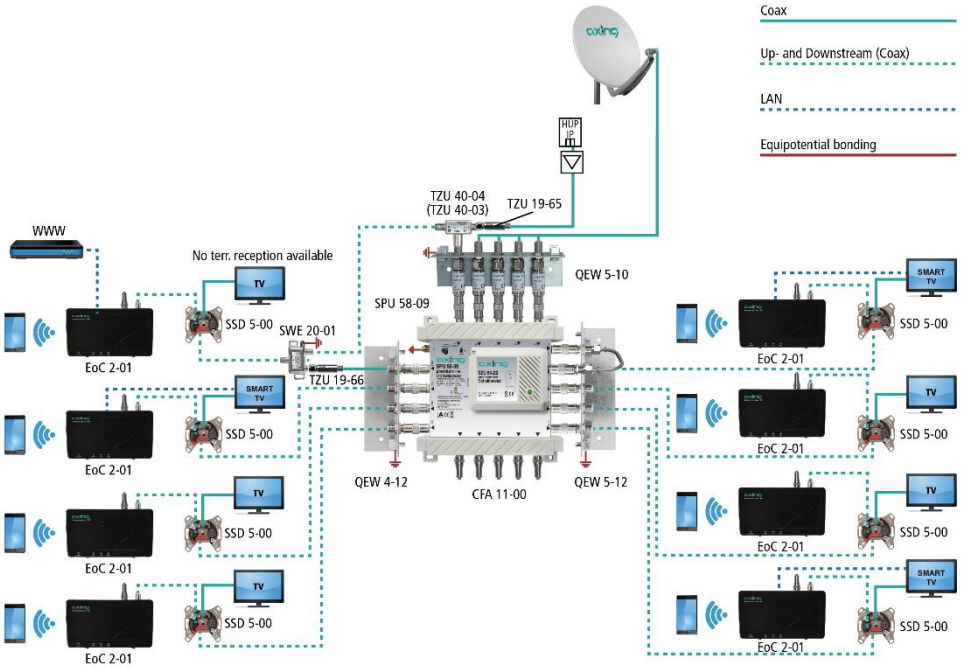

2. Installation and commissioning

1. Connect the router with the enclosed Ethernet cable to one of both RJ-45 LAN sockets of the EoC modem.
1. Connect the EoC socket to the available antenna network structure
   (see example 1 to 4).

There are several ways to feed the IP data into the existing antenna network structure.

- via a return channel capable antenna socket in the distribution network (see example 1 or 3)
- via the passive terrestrial input of the SAT multiswitch or the passive terrestrial input of a distribution structure (see example 2 or 4).

2. Connect your computer using the enclosed Ethernet cable to one of both RJ-45 LAN sockets of the second EoC modem.
3. Then connect the EoC modem using the EoC-F socket to the return channel capable antenna socket (see example 1 or 3) or to the **return channel capable** EoC combiner (see example 2 or 4).

➔ Repeat step 3 + 4 for further commissioning of EoC 2-01.

After all connections have been established, the EoC devices can be switched on by means of the mains switch and the connected devices (PC, laptop etc.) can be booted up.

The LEDs Power, EoC, LAN and WiFi are lit and the data transfer is established.

Notes:

- Up to two networkable devices can be connected to one EoC modem without any switch.
- Additionally, a TV or radio device can be connected to the TV-F socket of the EoC modem.

2.1. Connection examples for AXING antenna wall outlets

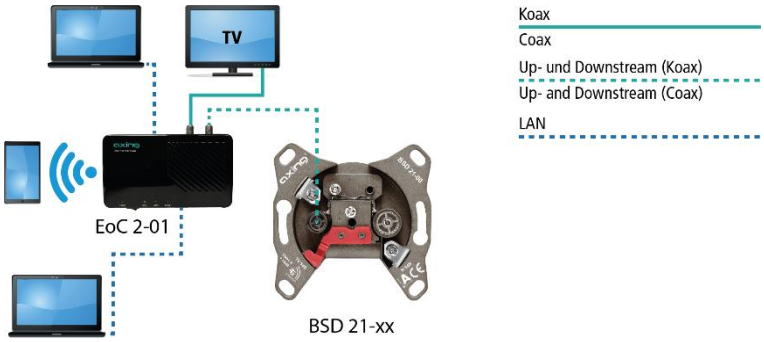

BSD 21-xx
Extended wideband wall outlets

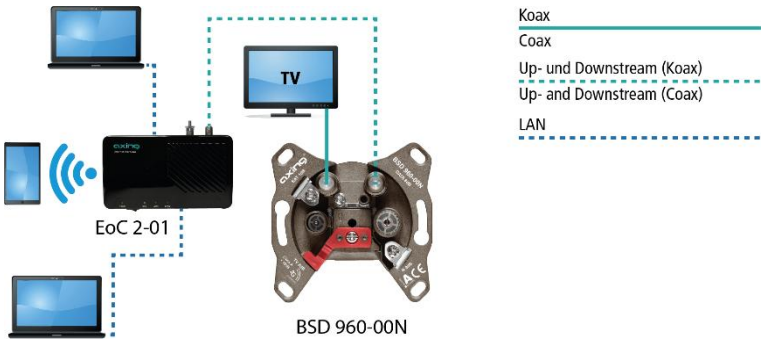

BSD 960-xxN
Multimedia antenna wall outlets

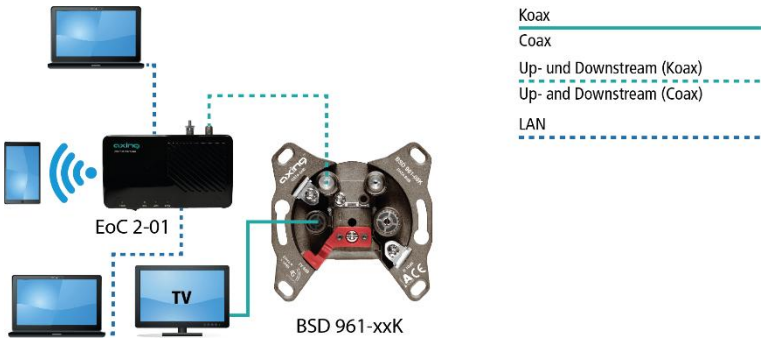

BSD 961-xxK
Multimedia antenna wall outlets

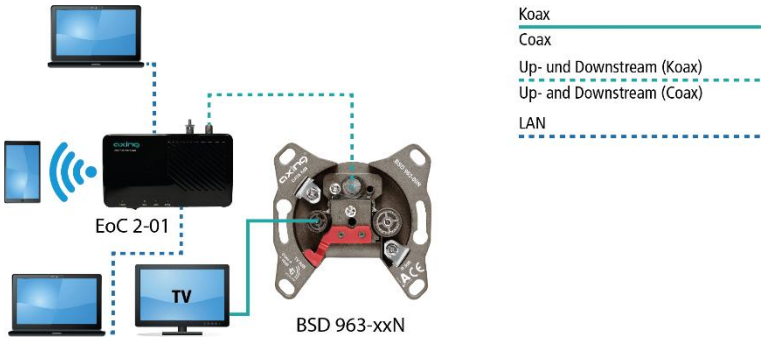

BSD 963-xxN
Multimedia antenna wall outlets

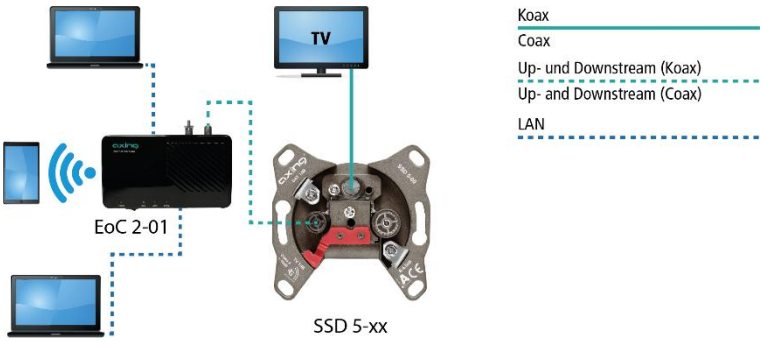

SSD 5-xx SAT antenna wall outlets

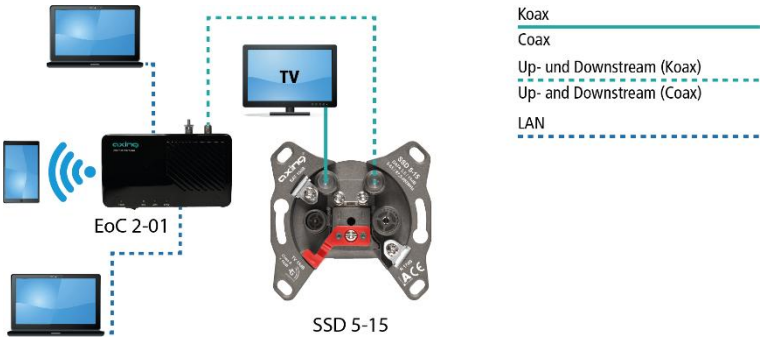

SSD 5-15 SAT multimedia-antenna wall outlets

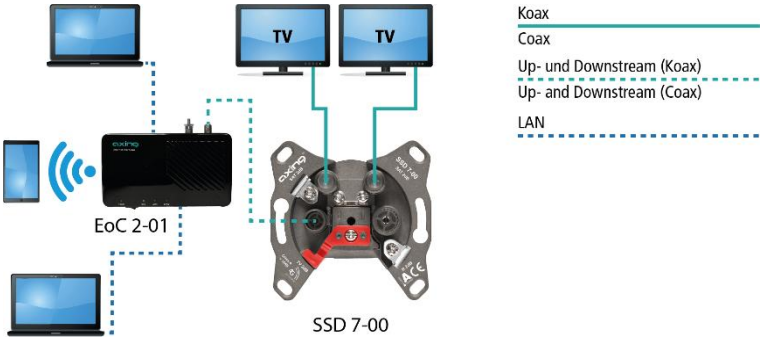

SSD 7-00 SAT twin antenna wall outlets

3. Basic functions

After having switched on the EoC modem, the LEDs should indicate the following states:

- The green Power LED is lit.
  - After approx. 10 seconds, the LEDs are lit/flashing as follows:
  - EoC LED green (flashes in case of data traffic)
  - LAN LED green (flashes in case of data traffic)
  - WiFi LED green (if WiFi is switched on) green (flashing in case of data traffic)

3.1. Standby mode:

The EoC modem switches after several minutes without data traffic to the Standby mode. The Power LED is flashing green then.

3.2. EoC Reset button:

The EoC reset button is used for the following functions:

- reset to the factory default setting (press > 10 s).
- delete the network key (press 5…8 s)
- generate a private network (press <1 s)

3.3. EoC Reset Function:

Hold the reset button depressed for one second using a bent up paper clip, in order to reset the device to the factory defaults.

The EoC reset button does not work in standby mode.

3.4. WiFi WPS/Reset button:

The WiFi WPS/Reset button is used to reset the WiFi router to the factory IP address 192.168.100.111

- The WiFi WPS/reset button does not work in standby mode.

3.5. WiFi access:

➔Switch WiFi ON. WiFi is active:

- Network name (SSID) = EoCxxxxxx
- (xxxxxx = last six signs of the MAC adress, you find on the type label of the modem)
- Encryption = WPA2
- Password = 0000000000000000

You should change the default password to secure your WiFi network!

4. EoC network with encryption

An EoC network consists of two or several (maximum 64) EoC modems which use the same network key.

In an existing antenna system with several participants, all devices can communicate with each other. Therefore, you should create a private EoC network.

Securing your EoC network allows you to protect the information sent via the network from unauthorized access. This is particularly important in multi-family homes, office buildings, schools and other buildings.

There are two ways to secure your EoC network.

- Use the EoC Reset button to generate a random network key automatically.
- You can use the Security software to specify a key for your EoC network (free download under http://www.axing.com | Download).

4.1. Pair or group formation:

Deleting the network key:

To generate an invidual network key, you have to delete the default network key first. Press the EoC Reset button on the rear side of the EoC device for 5…8 seconds (until the Power LED flashes). Carry out this step for all devices.

Pair and group formation:

Press the EoC Reset button briefly (<1 s) on the rear side of the EoC device. The Power LED starts flashing. Now also press the EoC Reset button of the next EoC modem briefly. A new network key between the two EoC modems is generated and the devices establish a connection. The EoC LED will flash for a short time.

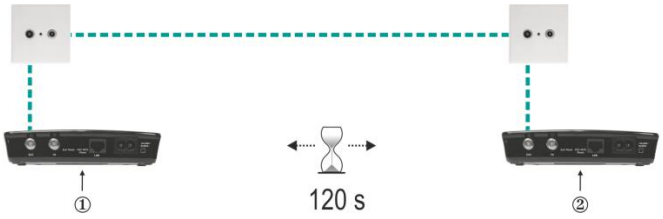

In order to connect the two devices to each other, press the EoC Reset button on the second device within a time period of two minutes.

➔ Check the LEDs on both EoC devices. The Power LEDs must flash during the connection establishment of the devices. Wait for approx. one minute while the EoC devices get connected to each other. As soon as the procedure has been completed, both Power- and EoC LEDs are again permanently lit.
If the Power LED is not flashing, after you have pressed the EoC Reset button, then you might have kept it pressed for too long.

➔ Try it again and press the WiFi WPS/Reset button for <1 second.
If the EoC LEDs are not lit on both EoC devices, the EoC devices are not connected. Repeat the steps in this section.

5. Settings for the WiFi network

The EoC 2-01 WiFi modem is configured using a web browser. The factory IP address is 192.168.100.111 and the subnet mask is 255.255.255.0.

The WiFi WPS/Reset button is used to reset the WiFi router to the factory IP address 192.168.100.111. Press the WiFi WPS/Reset button and keep it pressed for at least 10 seconds. Then switch off the device and switch it on again. The device is now in the delivery state again.

5.1. Accessing the configuration screen

➔ Change the IP address of the PC / laptop, for example to 192.168.100.11:
Control panel > Network connections > LAN connection >Properties >
Internet protocol version 4 TCP/IPv4 > Properties > Use the following IP address:
Press OK to save.

➔ Connect the EoC 2-01 using a LAN patch cable to the PC / laptop.

➔ Now enter the IP address 192.168.100.111 in the web browser.
A dialog for user name and password input is displayed.

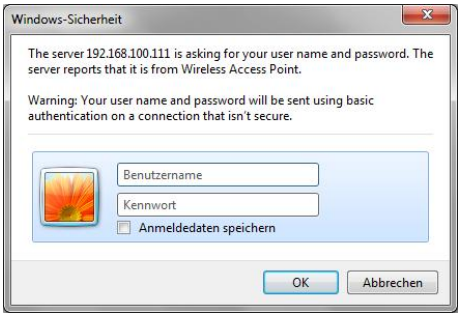

5.1.1. Login

The configuration screen of the EoC 2-01 is protected by a password.

➔ Enter the user name admin and then the ex-factory preset password 000000

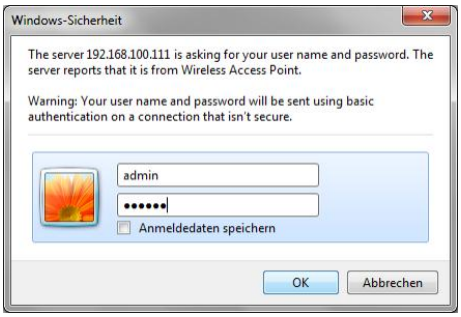

Note: Change the default password (see 5.5.7 on page 23)!

➔ Click Ok.
The Wireless AP router window is opened.

5.2. Operation Mode

The main page, called "Setup Wizard" offers you the most basic settings needed for Wi-Fi operating mode.

After selecting one of the following options, you will be guided through the installation process.

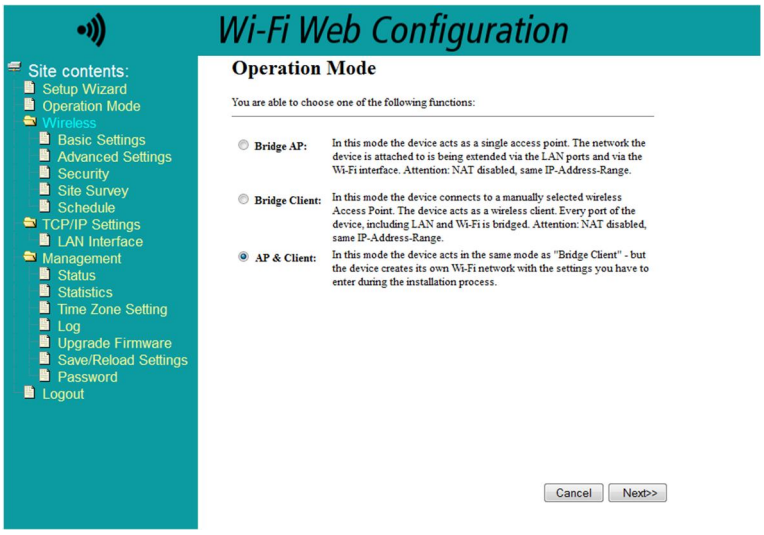

You are able to choose one of the following functions:

Bridge AP

In this mode the device acts as a single access point. The network the device is attached to is being extended via the LAN ports (device acts as switch) and via the Wi-Fi interface.

If EoC feature is used, the EoC network is also being bridged. This means, every device connected to the EoC 2-01 network is automatically part of the network the EoC-device is part of.

Attention: NAT disabled, same IP-Address-Range, if there is a DHCP-Server in the existing network, this Server also assigns IP-Addresses in the network of the EoC 2-01. There is no need to configure a network-internal DHCP-Server separately.

Bridge Client

In this mode the device connects to a manually selected wireless Access Point. The device acts as a wireless client.

Every port of the EoC 2-01, including LAN and Wi-Fi is bridged. This means, every device connected to the EoC 2-01 network is automatically part of the wireless network the device is connected to.

Attention: NAT disabled, same IP-Address-Range, if there is a DHCP-Server in the existing network, this Server also assigns IP-Addresses in the network of the EoC 2-01. There is no need to configure a network-internal DHCP-Server separately.

Attention: The EoC 2-01 is not able to connect to existing networks, which use WPA in this mode.

AP & Client

In this mode the device acts in the same mode as "Bridge Client" - but the EoC 2-01 device creates its own Wi-Fi network with the settings you have to enter during the installation process.

During the installation process you will have to select to which Wi-Fi network the device should connect to. The web-front-end offers you a "Wireless Site Survey" at that specific installation point.

Attention: Please note that the newly created network uses the same channel as the network to which the device connects to.

5.3. Wireless Settings

5.3.1. Wireless Basic Settings

On this page the settings for the local Wi-Fi Access Point are set.

Attention: Only 2.4 GHz-Mode is supported!

In the "Mode" menu you can select whether you want the device to act as "AP" (Access Point), "Client" (of another Wi-Fi-Network) or "AP + WDS".

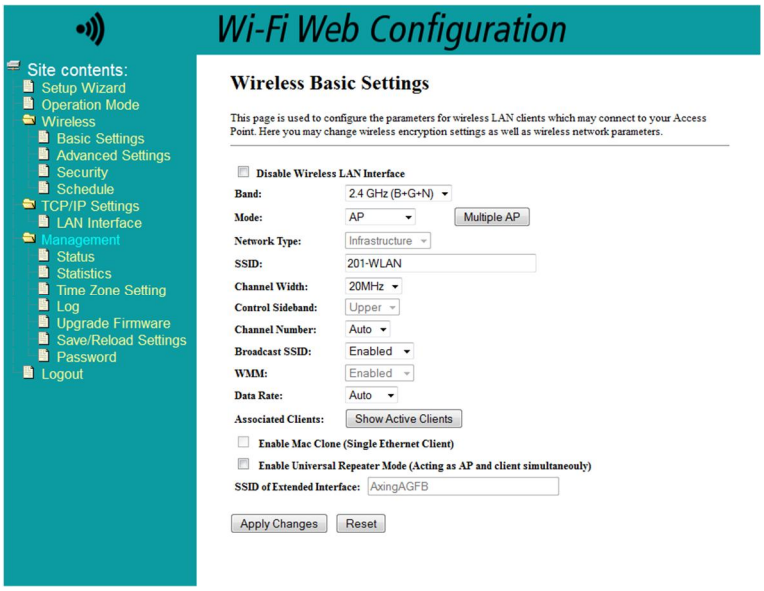

5.3.2. Wireless Security Setup

On this page the settings for Wireless Security are set.

Please note that only WPA & WPA2 are secure options (WEP is known to be vulnerable).

The use of WPA2-AES (no mixed mode) is recommended.

The key has to consist of at least 8 characters.

You are free to choose of capital and small letters as well as digits.

5.3.3. Wireless Site Survey

Before applying the settings you have to decide to which Wi-Fi network you want the EoC 2-01 to connect to.

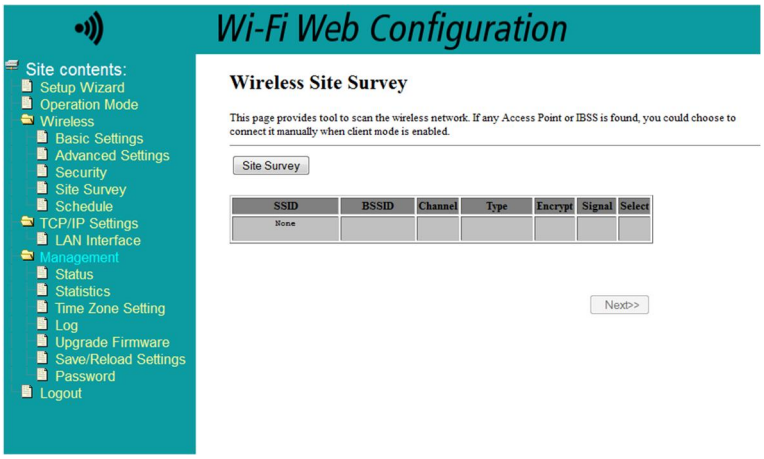

You can rescan the available networks using the "Site Survey" button on top.

5.3.4. Wireless Advanced Settings

Very specific advanced Wi-Fi settings can be set here.

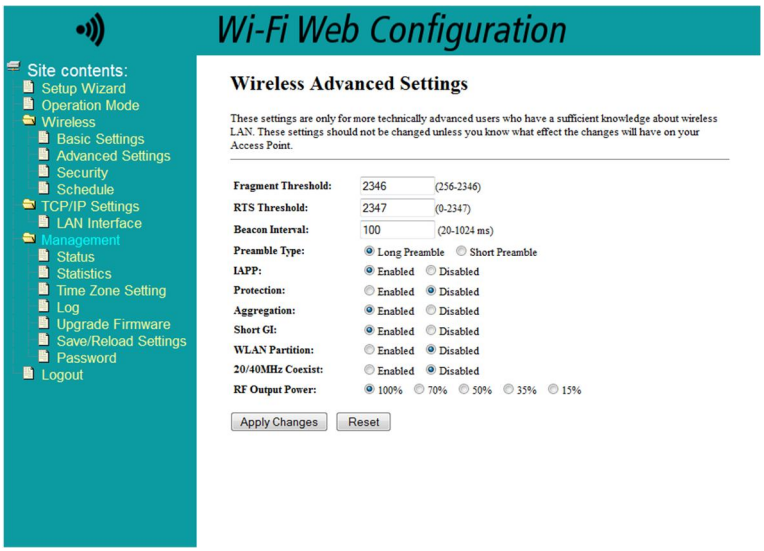

For example you can adjust the RF Output Power, which directly correlates with the Wi-Fi coverage range.

5.3.5. Wireless Schedule

The Wireless Schedule allows the user to set times at which the Wi-Fi broadcast is being deactivated.

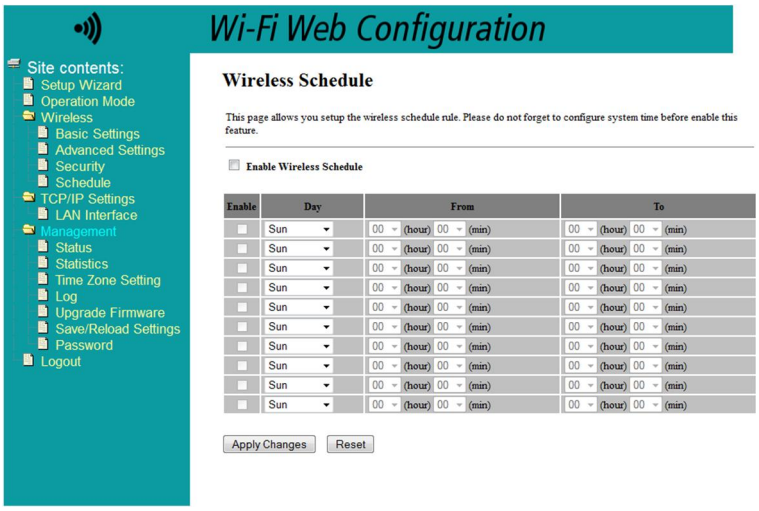

You can for instance choose to disable Wi-Fi at night.

This feature is disabled by default.

5.4. TCP/IP Settings

5.4.1. LAN Interface Setup

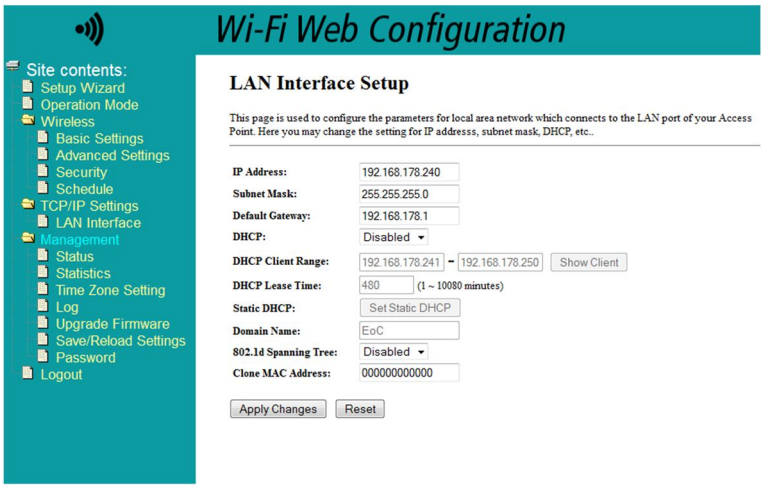

On this page the IP Address and Subnet Mask of the local EoC 2-01 device is being set.

5.5. Management

5.5.1. Access Point Status

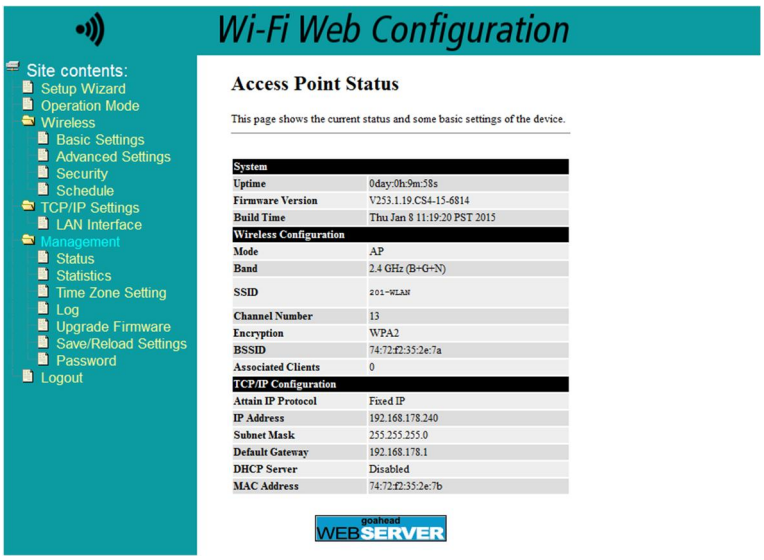

The status page shows some basically information about the system, Wi-Fi Connection and LAN Connection.

5.5.2. Statistics

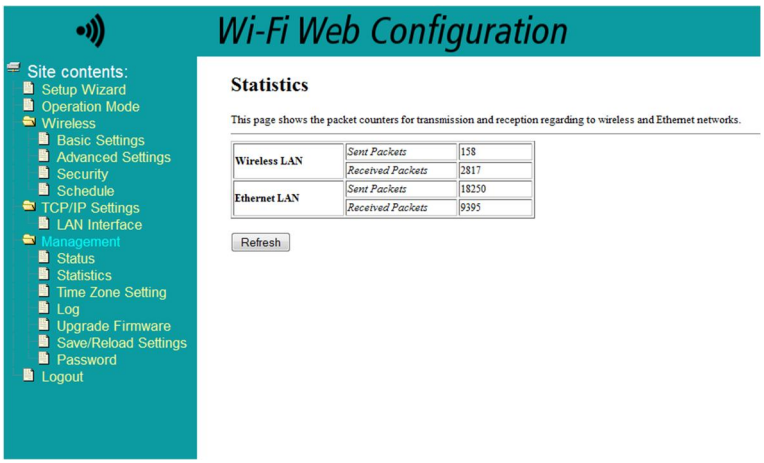

This page gives you an overview about sent / received packets inside the specific networks.

5.5.3. Time Zone Setting

Time, Date and Time-zone can be adjusted here. Optionally a NTP (Network Time Protocol) Server can be added here, too.

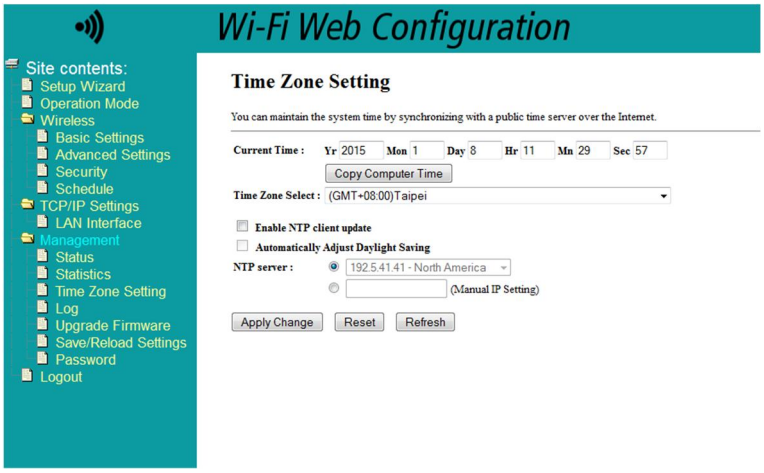

5.5.4. System Log

On this page you can view the current system log. Also you can specify a log server to upload the logs to.

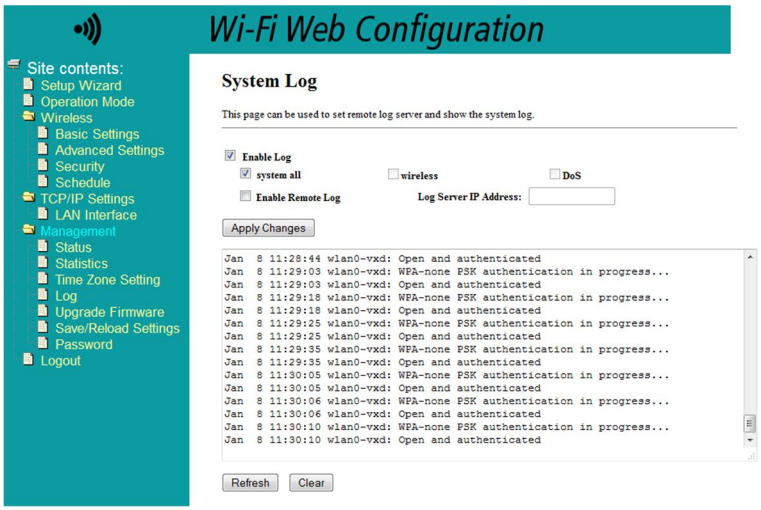

5.5.5. Upgrade Firmware

This page enables you to upload new released firmware versions.

In case of an update you receive a document with additional information about how to update the device.

In some cases it is necessary to clear your browser-cache after you upgraded your firmware.

Updates are published on our website: http://www.axing.com/.

5.5.6. Save / Reload Settings

At this page you can export the current configuration into a file to download onto your local computer.

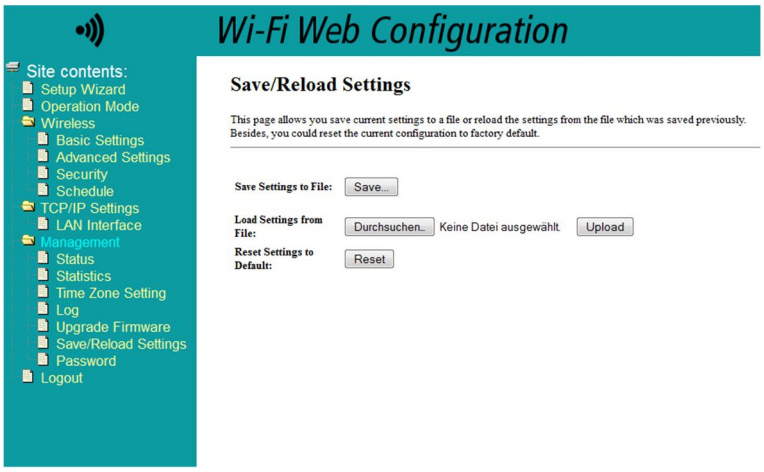

Also it is possible to restore these settings or load factory defaults.

5.5.7. Password Setup

This page allows you to customize the used password for accessing the web-front-end.

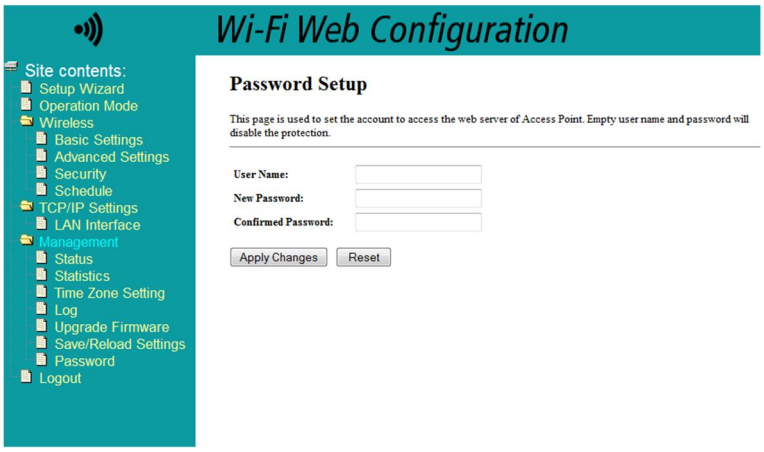

The default credentials are:

User: 'admin'

Password: '000000'

Note: Change the default password!

6. Troubleshooting

6.1. LEDs

The LEDs indicate an "activity" and are used for troubleshooting.

Power LED off

➔ Make sure that the network cable is connected correctly.
➔ Make sure that the mains switch of the EoC modem is switched on.

LAN LED is not flashing

No data traffic. Check the following:
➔ Are the router and the modem switched on?
➔ Is the Ethernet cable connected firmly to the LAN port of the router/modem?
➔ Can the PC - connected to the router - establish a connection to the Internet?
➔ Press the EoC Reset button on each EoC modem for 10 seconds to restore the factory settings of the EoC modem.
➔ If necessary generate a new network key (see chapter 4 on page 12).

EoC LED off - is not lit

The EoC devices cannot be found.
➔ Make sure that the EoC devices are connected to the same antenna network and that they use the same network key.
➔ Position the EoC modem closer to the computer or the EoC modem.
➔ After having activated the network security, make sure that all EoC modems use the same network key.
➔ If the problem occurs, after the network key has been changed, re-establish the factory settings of each device again. Then, you can generate the key again (see chapter 4 on page 12).
➔ Check whether your antenna system provides a return channel.

EoC-LED is lit in red

➔ The line attenuation between the EoC modem is too high. Position the EoC modem closer to the master device.

7. Technical data

7.1. Data sheet

Frequency range	
EoC input/output	2…1006 MHz
IP signal	2…68 MHz
TV output	85…1006 MHz
Through loss	<0,5 dB
Output level min. 1…30 MHz	100 dBµV
Output level min. 30…68 MHz	90 dBµV
Network	Up to 64 EoC modems
Gross data rate	500 Mbps
Net data rate	230 Mbps
Range	up to 700 m
Modulation	4096/1024/256/64/16/8-QAM, QPSK, BPSK and ROBO modulation scheme
Encryption	128 bit AES
Ethernet interface	10/100/1000 Mbps
Network standards	Home Plug AV IEEE1901, IEEE802.3, IEEE802.3u
WiFi network standard	IEEE 802.11/b/g/n
Frequency range	13 channels 2.412GHz~2.472GHz
Connections (TV/EoC)	2 F sockets
Connections (LAN)	2 RJ 45
LEDs	Power /EoC /LAN/WiFi
Switching power supply unit	110-230 V~ 50/60 Hz
Power consumption	max. 5.5 W
Operating temperature	0°C ~ 40°C
Dimensions	145 (W) x 82.5 (D) x 33 (H) mm
Corresponds to the standards	EN 50083-2 Class A

7.2. Drilling template

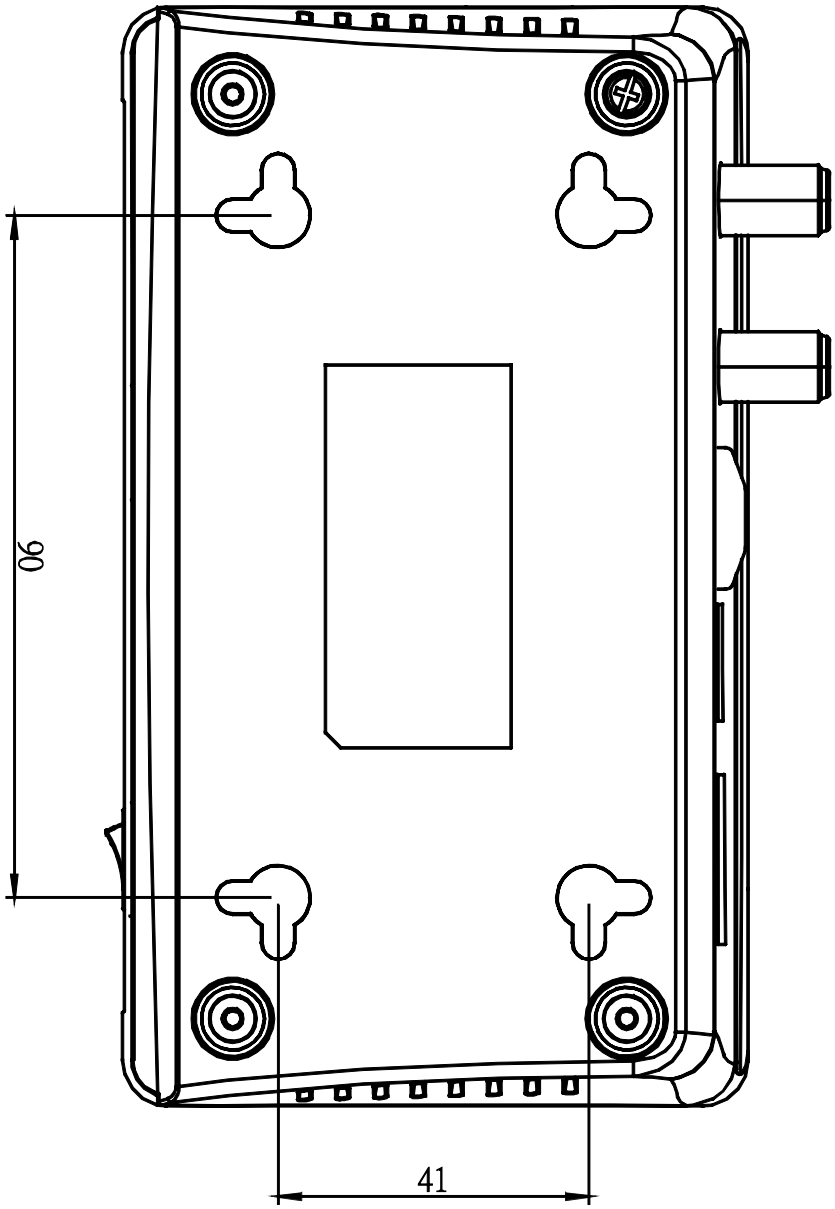

8. Used open source software

GNU GENERAL PUBLIC LICENSE

Version 2, June 1991

Copyright (C) 1989, 1991 Free Software Foundation, Inc.

51 Franklin Street, Fifth Floor, Boston, MA 02110-1301, USA

Everyone is permitted to copy and distribute verbatim copies of this license document, but changing it is not allowed.

Preamble

The licenses for most software are designed to take away your freedom to share and change it. By contrast, the GNU Gen- eral Public License is intended to guarantee your freedom to share and change free software--to make sure the software is free for all its users. This General Public License applies to most of the Free Software Foundation's software and to any other program whose authors commit to using it. (Some other Free Software Foundation software is covered by the GNU Lesser General Public License instead.) You can apply it to your programs, too.

When we speak of free software, we are referring to freedom, not price. Our General Public Licenses are designed to make sure that you have the freedom to distribute copies of free software (and charge for this service if you wish), that you receive source code or can get it if you want it, that you can change the software or use pieces of it in new free programs; and that you know you can do these things.

To protect your rights, we need to make restrictions that forbid anyone to deny you these rights or to ask you to surrender the rights. These restrictions translate to certain responsibilities for you if you distribute copies of the software, or if you modify it.

For example, if you distribute copies of such a program, whether gratis or for a fee, you must give the recipients all the rights that you have. You must make sure that they, too, receive or can get the source code. And you must show them these terms so they know their rights.

We protect your rights with two steps: (1) copyright the software, and (2) offer you this license which gives you legal permission to copy, distribute and/or modify the software.

Also, for each author's protection and ours, we want to make certain that everyone understands that there is no warranty for this free software. If the software is modified by someone else and passed on, we want its recipients to know that what they have is not the original, so that any problems introduced by others will not reflect on the original authors' reputations. Finally, any free program is threatened constantly by software patents. We wish to avoid the danger that redistributors of a free program will individually obtain patent licenses, in effect making the program proprietary. To prevent this, we have made it clear that any patent must be licensed for everyone's free use or not licensed at all.

The precise terms and conditions for copying, distribution and modification follow.

TERMS AND CONDITIONS FOR COPYING, DISTRIBUTION AND MODIFICATION

1. This License applies to any program or other work which contains a notice placed by the copyright holder saying it may be distributed under the terms of this General Public License. The "Program", below, refers to any such program or work, and a "work based on the Program" means either the Program or any derivative work under copyright law: that is to say, a work containing the Program or a portion of it, either verbatim or with modifications and/or translated into another language. (Hereinafter, translation is included without limitation in the term "modification".) Each licensee is ad- dressed as "you". Activities other than copying, distribution and modification are not covered by this License; they are outside its scope. The act of running the Program is not restricted, and the output from the Program is covered only if its contents constitute a work based on the Program (independent of having been made by running the Program). Whether that is true depends on what the Program does.

2. You may copy and distribute verbatim copies of the Program's source code as you receive it, in any medium, provided that you conspicuously and appropriately publish on each copy an appropriate copyright notice and disclaimer of war- ranty; keep intact all the notices that refer to this License and to the absence of any warranty; and give any other recipients of the Program a copy of this License along with the Program.
   You may charge a fee for the physical act of transferring a copy, and you may at your option offer warranty protection in exchange for a fee.
3. You may modify your copy or copies of the Program or any portion of it, thus forming a work based on the Program, and copy and distribute such modifications or work under the terms of Section 1 above, provided that you also meet all of these conditions:

a) You must cause the modified files to carry prominent notices stating that you changed the files and the date of any change.

b) You must cause any work that you distribute or publish, that in whole or in part contains or is derived from the Program or any part thereof, to be licensed as a whole at no charge to all third parties under the terms of this License.

c) If the modified program normally reads commands interactively when run, you must cause it, when started running for such interactive use in the most ordinary way, to print or display an announcement including an appropriate copy- right notice and a notice that there is no warranty (or else, saying that you provide a warranty) and that users may redistribute the program under these conditions, and telling the user how to view a copy of this License. (Exception: if the Program itself is interactive but does not normally print such an announcement, your work based on the Program is not required to print an announcement.)
   These requirements apply to the modified work as a whole. If identifiable sections of that work are not derived from the Program, and can be reasonably considered independent and separate works in themselves, then this License, and its terms, do not apply to those sections when you distribute them as separate works. But when you distribute the same sec- tions as part of a whole which is a work based on the Program, the distribution of the whole must be on the terms of this License, whose permissions for other licensees extend to the entire whole, and thus to each and every part regardless of who wrote it. Thus, it is not the intent of this section to claim rights or contest your rights to work written entirely by you; rather, the intent is to exercise the right to control the distribution of derivative or collective works based on the Program.
   In addition, mere aggregation of another work not based on the Program with the Program (or with a work based on the Program) on a volume of a storage or distribution medium does not bring the other work under the scope of this License.

4. You may copy and distribute the Program (or a work based on it, under Section 2) in object code or executable form under the terms of Sections 1 and 2 above provided that you also do one of the following:

a) Accompany it with the complete corresponding machine-readable source code, which must be distributed under the terms of Sections 1 and 2 above on a medium customarily used for software interchange; or,

b) Accompany it with a written offer, valid for at least three years, to give any third party, for a charge no more than your cost of physically performing source distribution, a complete machine-readable copy of the corresponding source code, to be distributed under the terms of Sections 1 and 2 above on a medium customarily used for software inter- change; or,

c) Accompany it with the information you received as to the offer to distribute corresponding source code. (This alterna- tive is allowed only for noncommercial distribution and only if you received the program in object code or executable form with such an offer, in accord with Subsection b above.)
   The source code for a work means the preferred form of the work for making modifications to it. For an executable work, complete source code means all the source code for all modules it contains, plus any associated interface definition files, plus the scripts used to control compilation and installation of the

executable. However, as a special exception, the source code distributed need not include anything that is normally distributed (in either source or binary form) with the major components (compiler, kernel, and so on) of the operating system on which the executable runs, unless that component itself accompanies the executable.
If distribution of executable or object code is made by offering access to copy from a designated place, then offering equivalent access to copy the source code from the same place counts as distribution of the source code, even though third parties are not compelled to copy the source along with the object code.

5. You may not copy, modify, sublicense, or distribute the Program except as expressly provided under this License. Any attempt otherwise to copy, modify, sublicense or distribute the Program is void, and will automatically terminate your rights under this License. However, parties who have received copies, or rights, from you under this License will not have their licenses terminated so long as such parties remain in full compliance.
6. You are not required to accept this License, since you have not signed it. However, nothing else grants you permission to modify or distribute the Program or its derivative works. These actions are prohibited by law if you do not accept this License. Therefore, by modifying or distributing the Program (or any work based on the Program), you indicate your ac- ceptance of this License to do so, and all its terms and conditions for copying, distributing or modifying the Program or works based on it.
7. Each time you redistribute the Program (or any work based on the Program), the recipient automatically receives a license from the original licensor to copy, distribute or modify the Program subject to these terms and conditions. You may not impose any further restrictions on the recipients' exercise of the rights granted herein. You are not responsible for enforcing compliance by third parties to this License.
8. If, as a consequence of a court judgment or allegation of patent infringement or for any other reason (not limited to patent issues), conditions are imposed on you (whether by court order, agreement or otherwise) that contradict the condi- tions of this License, they do not excuse you from the conditions of this License. If you cannot distribute so as to satisfy simultaneously your obligations under this License and any other pertinent obligations, then as a consequence you may not distribute the Program at all. For example, if a patent license would not permit royalty-free redistribution of the Program by all those who receive copies directly or indirectly through you, then the only way you could satisfy both it and this License would be to refrain entirely from distribution of the Program.
If any portion of this section is held invalid or unenforceable under any particular circumstance, the balance of the section is intended to apply and the section as a whole is intended to apply in other circumstances.
It is not the purpose of this section to induce you to infringe any patents or other property right claims or to contest validity of any such claims; this section has the sole purpose of protecting the integrity of the free software distribution system, which is implemented by public license practices. Many people have made generous contributions to the wide range of software distributed through that system in reliance on consistent application of that system; it is up to the author/donor to decide if he or she is willing to distribute software through any other system and a licensee cannot impose that choice. This section is intended to make thoroughly clear what is believed to be a consequence of the rest of this License.
9. If the distribution and/or use of the Program is restricted in certain countries either by patents or by copyrighted inter- faces, the original copyright holder who places the Program under this License may add an explicit geographical distribu- tion limitation excluding those countries, so that distribution is permitted only in or among countries not thus excluded. In such case, this License incorporates the limitation as if written in the body of this License.
10. The Free Software Foundation may publish revised and/or new versions of the General Public License from time to time. Such new versions will be similar in spirit to the present version, but may differ in detail to address new problems or concerns.
Each version is given a distinguishing version number. If the Program specifies a version number of this License which ap- plies to it and "any later version", you have the option of following the terms and

conditions either of that version or of any later version published by the Free Software Foundation. If the Program does not specify a version number of this License, you may choose any version ever published by the Free Software Foundation.

11. If you wish to incorporate parts of the Program into other free programs whose distribution conditions are different, write to the author to ask for permission. For software which is copyrighted by the Free Software Foundation, write to the Free Software Foundation; we sometimes make exceptions for this. Our decision will be guided by the two goals of pre- serving the free status of all derivatives of our free software and of promoting the sharing and reuse of software generally.

NO WARRANTY

12. BECAUSE THE PROGRAM IS LICENSED FREE OF CHARGE, THERE IS NO WARRANTY FOR THE PROGRAM, TO THE EXTENT PERMITTED BY APPLICABLE LAW. EXCEPT WHEN OTHERWISE STATED IN WRITING THE COPYRIGHT HOLDERS AND/OR OTHER PARTIES PROVIDE THE PROGRAM "AS IS" WITHOUT WARRANTY OF ANY KIND, EITHER EXPRESSED OR IMPLIED, INCLUDING, BUT NOT LIMITED TO, THE IMPLIED WARRANTIES OF MERCHANTABILITY AND FITNESS FOR A PARTICULAR PURPOSE. THE ENTIRE RISK AS TO THE QUALITY AND PERFORMANCE OF THE PROGRAM IS WITH YOU. SHOULD THE PROGRAM PROVE DEFECTIVE, YOU ASSUME THE COST OF ALL NECESSARY SERVICING, REPAIR OR CORRECTION.

13. IN NO EVENT UNLESS REQUIRED BY APPLICABLE LAW OR AGREED TO IN WRITING WILL ANY COPYRIGHT HOLDER, OR ANY OTHER PARTY WHO MAY MODIFY AND/OR REDISTRIBUTE THE PROGRAM AS PERMITTED ABOVE, BE LIABLE TO YOU FOR DAMAGES, INCLUDING ANY GENERAL, SPECIAL, INCIDENTAL OR CONSEQUENTIAL DAM- AGES ARISING OUT OF THE USE OR INABILITY TO USE THE PROGRAM (INCLUDING BUT NOT LIMITED TO LOSS OF DATA OR DATA BEING RENDERED INACCURATE OR LOSSES SUSTAINED BY YOU OR THIRD PARTIES OR A FAILURE OF THE PROGRAM TO OPERATE WITH ANY OTHER PROGRAMS), EVEN IF SUCH HOLDER OR OTHER PARTY HAS BEEN ADVISED OF THE POSSIBILITY OF SUCH DAMAGES.

END OF TERMS AND CONDITIONS

Hersteller | Manufacturer
AXING AG
Gewerbehaus Moskau
8262 Ramsen

EWR-Kontaktadresse | EEA contact address
Bechler GmbH
Am Rebberg 44
78239 Rielasingen